JVC

SERVICE MANUAL

DVD PLAYER & VIDEO CASSETTE RECORDER

HR-XV3EK, HR-XV31EK, HR-XV32EK, HR-XV3EX, HR-XV31EX, HR-XVS30EK, HR-XVS30EX

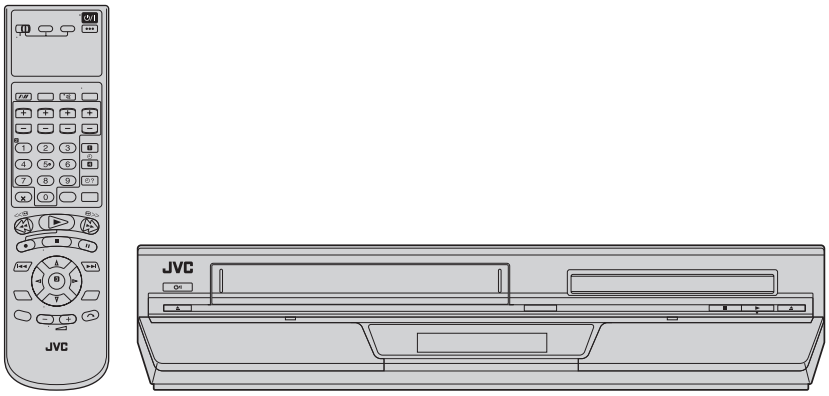

VIDEOPlus+® (EK models) VHS PAL (VHS models)
SHOWVIEW® (EX models)
Super VHS ET (S-VHS models) S-VHS 625 (S-VHS models)
DVD VIDEO Hi-Fi SQPB
dts DIGITAL OUT DOLBY DIGITAL 3D-PHONIC
COMPACT disc DIGITAL VIDEO COMPACT disc DIGITAL AUDIO COMPACT disc SUPER VIDEO

HR-XV3EK, HR-XV31EK, HR-XV32EK, HR-XV3EX, HR-XV31EX, HR-XVS30EK, HR-XVS30EX [D3PV1,D3PS1]

TABLE OF CONTENTS

1 PRECAUTION 1-3
2 SPECIFIC SERVICE INSTRUCTIONS 1-8
3 DISASSEMBLY 1-11
4 ADJUSTMENT 1-17
5 TROUBLESHOOTING 1-26

COPYRIGHT © 2003 VICTOR COMPANY OF JAPAN, LIMITED

No.YD002
2003/11

SPECIFICATION

	HR-XV3EK, HR-XV31EK, HR-XV32EK	HR-XV3EX, HR-XV31EX	HR-XVS30EK	HR-XVS30EX
GENERAL				
Power requirement	AC 220V - 240V, 50 Hz/60 Hz			
Power consumption				
Power on	26 W		30 W	
Power off	6.0 W			
Temperature				
Operating	5°C to 40°C			
Storage	-20°C to 60°C			
Operating position	Horizontal only			
Dimensions (W×H×D)	435 mm × 93 mm × 272 mm			
Weight	4.5 Kg	4.4 Kg	4.5 Kg	4.4 Kg
Format	VHS PAL standard		S-VHS/VHS PAL standard	
Maximum recording time				
(SP)	240 min. with E-240 video cassette			
(LP)	480 min. with E-240 video cassette			
(EP)	-		720 min. with E-240 video cassette	
VIDEO/AUDIO (VCR deck)				
Signal system	PAL-type colour signal and CCIR monochrome signal, 625 lines/50 fields			
Recording system	DA4 (Double Azimuth) head helical scan system			
Signal-to-noise ratio:	45 dB			
Horizontal resolution	250 lines		SP/LP: 250 lines (VHS)/400 lines (S-VHS) EP: 220 lines (VHS)/350 lines (S-VHS)	
Frequency range	70 Hz to 10,000 Hz (Normal audio) 20 Hz to 20,000 Hz (Hi-Fi audio)			
Input/Output	21-pin SCART connectors: IN/OUT × 1, IN/DECODER × 1 RCA connectors: VIDEO IN × 1, AUDIO IN × 1, AUDIO OUT × 1		21-pin SCART connectors: IN/OUT × 1, IN/DECODER × 1 RCA connectors: VIDEO IN × 1, AUDIO IN × 1, AUDIO OUT × 1 S-Video connector: IN × 1	
VIDEO/AUDIO (DVD deck)				
Signal system	PAL			
Applicable disc	DVD (12 cm, 8 cm), CD (12 cm, 8 cm)			
Audio characteristics	DVD:4 Hz - 22 KHz			
Frequency response	CD:4 Hz - 20 KHz			
S/N Ratio	90 dB			
Wow and flutter	Below Measurable Level			
Dynamic range	90 dB			
Output				
Component-Y	-		(RCA) 1.0 Vp-p/75 Ω	
Component-PB/PR	-		(RCA) 0.7 Vp-p/75 Ω	
Audio	(RCA) 2 Vrms, 1 KΩ			
Digital Audio	-21 dBm to -15 dBm(peak)			
TUNER/TIMER(VCR deck)				
TV channel storage capacity	99 positions (+AUX position)			
Tuning system	Frequency synthesized tuner			
Channel coverage	VHF : 44.5 MHz - 143 MHz/ 143MHz - 470 MHz UHF : 470 MHz - 862 MHz	VHF : 47 MHz - 89 MHz/ 104 MHz - 300MHz/302 MHz - 470 MHz UHF : 470 MHz - 862 MHz	VHF : 44.5 MHz - 143 MHz/ 143 MHz - 470 MHz UHF : 470 MHz - 862 MHz	VHF : 47 MHz - 89 MHz/ 104 MHz - 300 MHz/302 MHz - 470 MHz UHF : 470 MHz - 862 MHz
Aerial output	UHF channels 22 - 69 (Adjustable)			
Memory backup time	Approx. 10 min.			
ACCESSORIES				
Provided accessories	RF cable, Infrared remote control unit, "R6" battery × 2			

Specifications shown are for SP mode unless otherwise specified.
E.& O.E. Design and specifications subject to change without notice.
Manufactured under license from Dolby Laboratories. "Dolby" and the double-D symbol are trademarks of Dolby Laboratories.
"DTS" and "DTS Digital Out" are trademarks of Digital Theater Systems, Inc.

1.4 Precautions for Service

1.4.1 Handling of Traverse Unit and Laser Pickup

(1) Do not touch any peripheral element of the pickup or the actuator.
(2) The traverse unit and the pickup are precision devices and therefore must not be subjected to strong shock.
(3) Do not use a tester to examine the laser diode. (The diode can easily be destroyed by the internal power supply of the tester.)
(4) To replace the traverse unit, pull out the metal short pin for protection from charging.
(5) When replacing the pickup, after mounting a new pickup, remove the solder on the short land which is provided at the center of the flexible wire to open the circuit.
(6) Half-fixed resistors for laser power adjustment are adjusted in pairs at shipment to match the characteristics of the optical block. Do not change the setting of these half-fixed resistors for laser power adjustment.

1.4.2 Destruction of Traverse Unit and Laser Pickup by Static Electricity

Laser diodes are easily destroyed by static electricity charged on clothingor the human body. Before repairing peripheral elements of the traverse unit or pickup, be sure to take the following electrostatic protection:

(1) Wear an antistatic wrist wrap.
(2) With a conductive sheet or a steel plate on the workbench on which the traverse unit or the pick up is to be repaired, ground the sheet or the plate.
(3) It solders to two short circuit sections on the substrate of a pick-up.
(4) After removing the flexible wire from the connector (CN101), short-circuit the flexible wire by the metal clip.
(5) Short-circuit the laser diode by soldering the land which is provided at the center of the flexible wire for the pickup. After completing the repair, remove the solder to open the circuit.

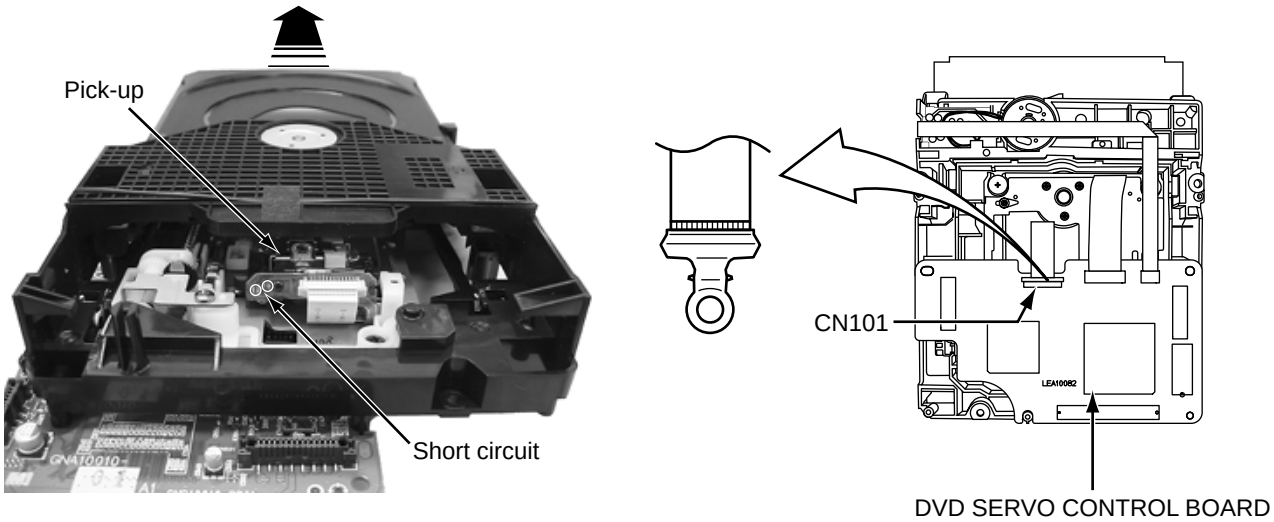

* Please refer to the SECTION3 DISASSEMBLY method for details.

SECTION 2
SPECIFIC SERVICE INSTRUCTIONS

2.1 Different table of feature

The following table indicates main different points between models HR-XV3EK, HR-XV31EK,HR-XV32EK, HR-XV3EX, HR-XV31EX, HR-XVS30EK, and HR-XVS30EX.

	HR-XV3EK	HR-XV31EK	HR-XV32EK	HR-XV3EX	HR-XV31EX	HR-XVS30EK	HR-XVS30EX
POWER PLUG	3PIN	←	←	CEE	←	3PIN	CEE
BODY COLOR	PURE SILVER	←	BLACK	PURE SILVER	←	←	←
FRONT PANEL COVER	USED	NOT USED	USED	←	NOT USED	USED	←
REMOCON COLOUR	GRAY	←	BLACK	GRAY	←	←	←
VHS	PAL/NTSC PB on PAL TV with HiFi	←	←	PAL/MESECAM (MANUAL) / NTSC PB on PAL TV with HiFi	←	PAL/NTSC PB on PAL TV with HiFi	PAL/MESECAM (MANUAL) / NTSC PB on PAL TV with HiFi
S-VHS	NOT USED	←	←	←	←	USED	←
S-VHS ET	NOT USED	←	←	←	←	USED	←
SQPB	USED	←	←	←	←	NOT USED	←
RECORDING & PLAYBACK SPEED	SP/LP	←	←	←	←	SP/LP/EP	←
FRONT INPUT	VIDEO,AUDIO (L/R)	←	←	←	←	S-VIDEO, VIDEO,AUDIO (L/R)	←
REAR L-1 INPUT	SCART IN / OUT(RGB)	←	←	←	←	SCART IN / OUT (Y/C,RGB)	←
COMPORNENT VIDEO OUT	NOT USED	←	←	←	←	DVD:Y/Pb/Pr	←
BROADCASTING STANDARD	I	←	←	B/G,D/K	←	I	B/G,D/K
STEREO DECODER	NICAM	←	←	NICAM/A2	←	NICAM	NICAM/A2
RF OUT CH/RF OUT SYSTEM[INITIAL]	22-69CH,OFF [AUTO]/I	←	←	22-69CH,OFF [AUTO]/G,K	←	22-69CH,OFF [AUTO]/I	22-69CH,OFF [AUTO]/G,K
VCR PLUS+	VIDEOPLUS+	←	←	SHOWVIEW	←	VIDEOPLUS+	SHOWVIEW
VPS/PDC	NOT USED	←	←	USED	←	NOT USED	USED
OSD LANGUAGES	VCR:ENGLISH DVD:ENGLISH/ FRENCH/ GERMANY	←	←	VCR:13 LANGUAGES DVD:ENGLISH/ FRENCH/ GERMANY	←	VCR:ENGLISH DVD:ENGLISH/ FRENCH/ GERMANY	VCR:13 LANGUAGES DVD:ENGLISH/ FRENCH/ GERMANY
WMA(CD-R/RW)	NOT USED	←	←	←	←	USED	←
ILLUMINATION COLOR	BLUE	NOT USED	BLUE	←	NOT USED	BLUE	←

NOTE :

Mark ← is same as left.

2.2 Service position

This unit has been designed so that the Mechanism and Main board assemblies can be removed together from the bottom chassis. Before diagnosing or servicing the circuit boards, take out the major parts from the bottom chassis.

2.2.1 How to set the "Service position"

(1) Refer to the disassembly procedure and perform the disassembly of the major parts before removing the Mechanism assembly.
(2) Remove the screws that fix the Mechanism, Regulator board assembly to the bottom chassis. If any other screws are used to fix the boards, remove them also.
(3) Remove the combined Mechanism,Regulator borad and Main board assemblies.
(4) If any other major parts are used, remove them also.
(5) Connect the wires and connectors of the major parts that have been removed in steps (1) to (4). (Refer to Fig. 2-2a.)
(6) Place the combined Mechanism, Main board and other board assemblies upside down.
(7) Insert the power cord plug into the power outlet and then proceed with the diagnostics and servicing of the board assembly.

Notes:

- **Before inserting the power cord plug into the power outlet, make sure that none of the electrical parts are able to short-circuit between the workbench and the board assembly.**
- **For the disassembly procedure of the major parts and details of the precautions to be taken, see "Removing the major parts".**
- **If there are wire connections from the Main board and Mechanism assemblies to the other major parts, be sure to remove them (including wires connected to the major parts) first before performing step (2).**
- **When carrying out diagnosis and repair of the Main board assembly in the "Service position", be sure to ground both the Main board and Mechanism assemblies. If they are improperly grounded, there may be noise on the playback picture or FDP counter display may move even when the mechanism is kept in an inoperative status.**
- **In order to diagnose the playback or recording of the cassette tape, set the Mechanism assembly to the required mode before placing it upside down. If the mechanism mode is changed (including ejection) while it is in an upside down position the tape inside may be damaged.**
- **For some models, the mechanism and board assemblies are attached by connectors only. When carrying out a diagnosis or repair of the boards in the "Service position", make sure that the connectors are not disconnected.**

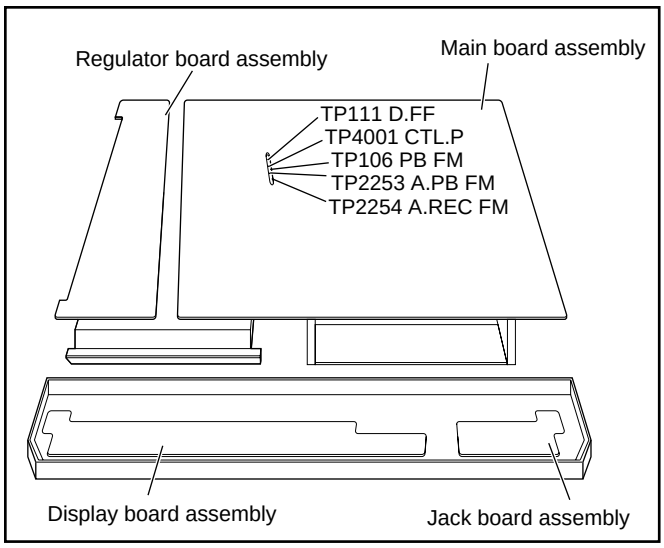

Fig.2-2a

2.3 Jig RCU mode

This unit uses the following two modes for receiving remote control codes.

(1) User RCU mode:Ordinary mode for use by the user.
(2) Jig RCU mode: Mode for use in production and servicing.

When using the Jig RCU, it is required to set the VCR to the Jig RCU mode (the mode in which codes from the Jig RCU can be received). As both of the above two modes are stored in the EEPROM, it is required to set the VCR back to the User RCU mode each time that an adjustment is made or to check that the necessary operations have been completed.These modes can be set by the operations described below.

Note:

- **Confirm the RCU mode when exchanged parts. Since some SERVICE PARTS sets the VCR to the Jig RCU mode as initial setting. Therefore please set the VCR to the user RCU mode after replacing the EEPROM.**

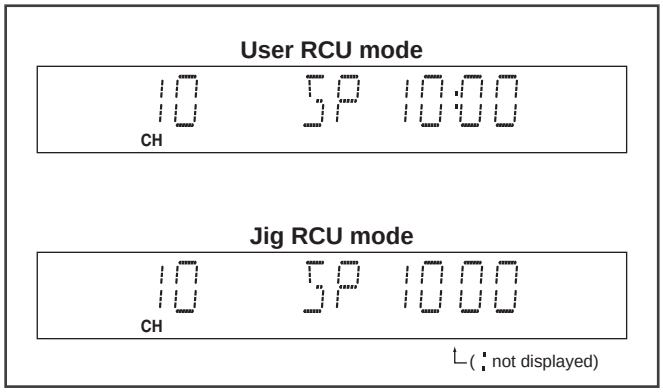

Fig.2-3a User/Jig RCU mode

2.3.1 Setting the Jig RCU mode

(1) Turn on the power.
(2) Press the following remocon keys continuously within 2 seconds " SET UP MENU " → " 2 " → " 8 " → " OK ". When the VCR is set to the Jig RCU mode, the symbols (" : ") in the time display of the FDP are turned off. (Refer to Fig.2-3a)

2.3.2 Setting the User RCU mode

(1) Turn off the power.
(2) Press the "REC" and "PAUSE" buttons of the VCR simultaneously. Alternatively, transmit the code "80" from the Jig RCU.

2.4 Mechanism service mode

This model has a unique function to enter the mechanism into every operation mode without loading of any cassette tape. This function is called the "Mechanism service mode".

2.4.1 How to set the "Mechanism service mode"

(1) Set the VCR to the Jig RCU mode (the mode in which codes from the Jig RCU can be received)
(2) Transmit the code "E5" from the Jig RCU.
(3) Release the lug of the Cassette holder and then slide the Cassette holder toward the direction where the Cassette holder is loaded by manually.
(4) The cassette holder lowers and, when the loading has completed, the mechanism enters the desired mode.
When the VCR is set to the Mechanism service mode, the symbols ("Timer") in the FDP (LED) are blinked.

2.4.2 How to exit from the "Mechanism service mode"

(1) Unplug the power cord plug from the power outlet.

2.5 Maintenance and inspection

2.5.1 Cleaning

Regular cleaning of the transport system parts is desirable but practically impossible. So make it a rule to carry out cleaning of the tape transport system whenever the machine is serviced.
When the video head, tape guide and/or brush get soiled, the playback picture may appear inferior or at worst disappear, resulting in possible tape damage.

Note:

- **Absolutely avoid sweeping the upper drum vertically as this will cause damage to the video head.**

(1) When cleaning the upper drum (especially the video head), soak a piece of closely woven cloth with alcohol and while holding the cloth onto the upper drum by the fingers, turn the upper drum counterclockwise.
(2) To clean the parts of the tape transport system other than the upper drum, use a piece of closely woven cloth or a cotton swab soaked with alcohol.
(3) After cleaning, make sure that the cleaned parts are completely dry before using the cassette tape.

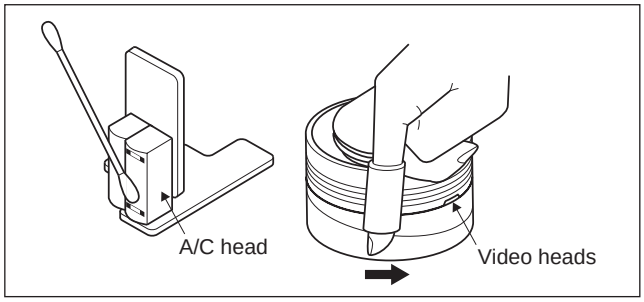

Fig.2-6a

2.5.2 Lubrication

With no need for periodical lubrication, you have only to lubricate new parts after replacement. If any oil or grease on contact parts is soiled, wipe it off and newly lubricate the parts.

Note:

- **See the "mechanism assembly" diagram of the "parts list" for the lubricating or greasing spots, and for the types of oil or grease to be used.**

2.5.3 Suggested servicing schedule for main components

The following table indicates the suggested period for such service measures as cleaning, lubrication and replacement. In practice, the indicated periods will vary widely according to environmental and usage conditions. However, the indicated components should be inspected when a set is brought for service and the maintenance work performed if necessary. Also note that rubber parts may deform in time, even if the set is not used.

System	Parts name	Operation hours	
		1000H	2000H
Tape transport	Drum assembly	C,X	X
	A/C head	C,X	C,X
	Pinch roller arm assembly	C	C
	Full erase head	C	C
	Tension arm assembly	C	C
	Capstan motor (Shaft)	C	C
	Guide arm assembly	C	C
Drive	Capstan motor		X
	Capstan brake assembly		X
	Main brake assembly		X
	Belt (Capstan)	X	X
	Loading motor		X
	Clutch unit		X
	Worm gear		X
	Control plate		X
Other	Rotary encoder		X

C : Cleaning
X : Inspection or Replacement if necessary

SECTION 3
DISASSEMBLY

3.1 Removing the major parts

3.1.1 Destination of connectors

Two kinds of double-arrows in connection tables respectively show kinds of connector/wires.

⇔ : Flat wire ↔ : Wire ⬌ : Board to board (B-B)

: The connector of the side to remove

CONN. No.	CONNECTOR					PIN No.
WR2a	Main	CN101	⇔	Digital	CN761	40
WR2b	Main	CN103	⇔	Digital	CN762	10

■ **Destination of connectors**

CONN. No.	CONNECTOR					PIN No.
WR2a	Main	CN7104	⇔	Jack	CN7191	11
WR2b	Main	CN3102	⇔	Display	CN7003	14
WR2c	Main	CN3103	⇔	Display	CN7004	14
WR3a	Main	CN2001	⇔	A/C head		6
WR3b	Drum assembly		⇔	Main	CN1	9
CN5302 (CN501)	Regulator	CN5302	⬌	DVD servo control	CN501	22
CN7301 (CN502)	Main	CN7301	⬌	DVD servo control	CN502	22
WR6a	Regulator	CN5303	⇔	Main	CN5313	11
WR6b	Regulator	CN5301	↔	Main	CN5311	11

3.1.2 How to read the procedure table

This table shows the steps for disassembly of the externally furnished parts and board assemblies. Reverse these steps when re-assembling them.

Step/ Loc No.	Part Name	Fig. No.	Point	Note
[1]	Top cover	3-1a	4(S1a),(S1b),3(L1a), 2(SD1a),(P1a),(W1a), CN1(WR1a),	<Note 1a>
	Bracket		2(S1c)	

(1) (2) (3) (4) (5)

(1) Order of steps in Procedure
When reassembling, perform the step(s) in the reverse order.
These numbers are also used as the identification (location) No. of parts Figures.

(2) Part name to be removed or installed.

(3) Fig. No. showing procedure or part location.

(4) Identification of part to be removed, unhooked, unlocked, released, unplugged, unclamped or unsoldered.
P= Spring, W= Washer, S= Screw, L= Locking tab, SD= Solder, CN**(WR**)= Remove the wire (WR**) from the connector (CN**).

Note:
- **The bracketed ( ) WR of the connector symbol are assigned nos. in priority order and do not correspond to those on the spare parts list.**

(5) Adjustment information for installation

3.1.3 Disassembly procedure

Step/ Loc No.	Part Name	Fig. No.	Point	Note
[1]	Top cover	3-1d	6(S1a)	
[2]	Front panel assembly (Display board assembly) (Jack board assembly)	3-1a 3-1d	4(L2a),5(L2b),2(S2a) CN7104(WR2a), CN3102(WR2b), CN3103(WR2c),	<Note 2a> <Note 2b>
[3]	Mechanism assembly (Drum assembly) (Inertia plate) (Roller arm assembly)	3-1b 3-1c 3-1d	CN2001(WR3a) 3(S3a),(S3b) CN(WR3b) (S3c),(S3d),(S3e) 4(L3a) (P3a),(L3b)	<Note 2a> <Note 3a> <Note 3b> <Note 3c>
[4]	DVD unit (Bracket)	3-1d	3(S4a),(L4a),(S4b) 2(S4c),CN5302(CN501) CN7301(CN502)	
[5]	Rear cover	3-1d	7(S5a),(S5b),3(L5a)	
[6]	Regulator board assembly	3-1d	3(S6a) CN5303(WR6a), CN5301(WR6b)	<Note 2a>
[7]	Main board assembly	3-1d	2(S7a)	

<Note 2a>
- Be careful not to damage the connector and wire etc. during connection and disconnection.
- When connecting the flat wire to the connector, be careful with the flat wire direction.

<Note 2b>
- When reattaching the Front panel assembly, make sure that the door opener of the Side frame (R) is lowered in position prior to the reinstallation.
- When reattaching the Front panel assembly, pay careful attention to the switch lever of the Front panel assembly not to make it touch the switch knob of the Main board assembly from the side.
- When reattaching the Front panel assembly, lift the Cassette door slightly.

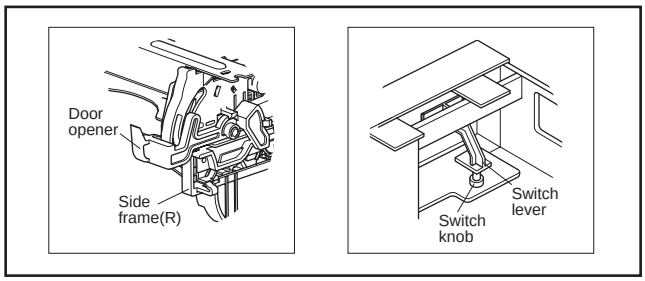

Fig.3-1a

<Note 3a>
- When reattaching the Mechanism assembly, secure the screws (S3a to S3b) in the order of 1,2,3.

<Note 3b>
- When reattaching the Mechanism assembly, be sure to align the phase of the Rotary encoder on the Main board assembly.
- When reattaching the Mechanism assembly, set the “Mechanism assembling mode”. [See “MECHANISM ASSEMBLY SERVICE MANUAL (No. 86700)”.]
- When reattaching the Mechanism assembly to the Main board assembly, take care not to damage the sensors and switch on the Main board assembly.

<Note 3c>

- When reattaching the Drum assembly, secure the screws (S3c to S3e) in the order of c, d, e.

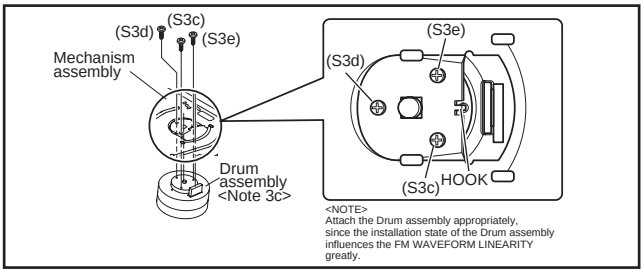

Fig.3-1b

- When handling the drum assembly alone, hold it by the motor or shaft. Be careful not to touch other parts, especially the video heads. Also take care not to damage the connectors.

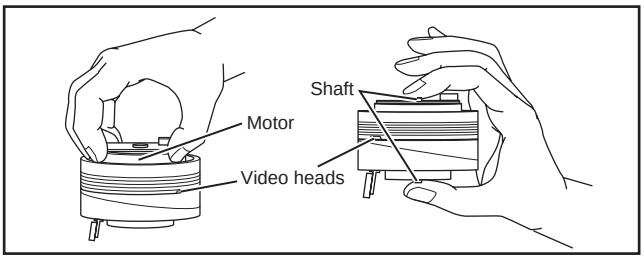

Fig.3-1c

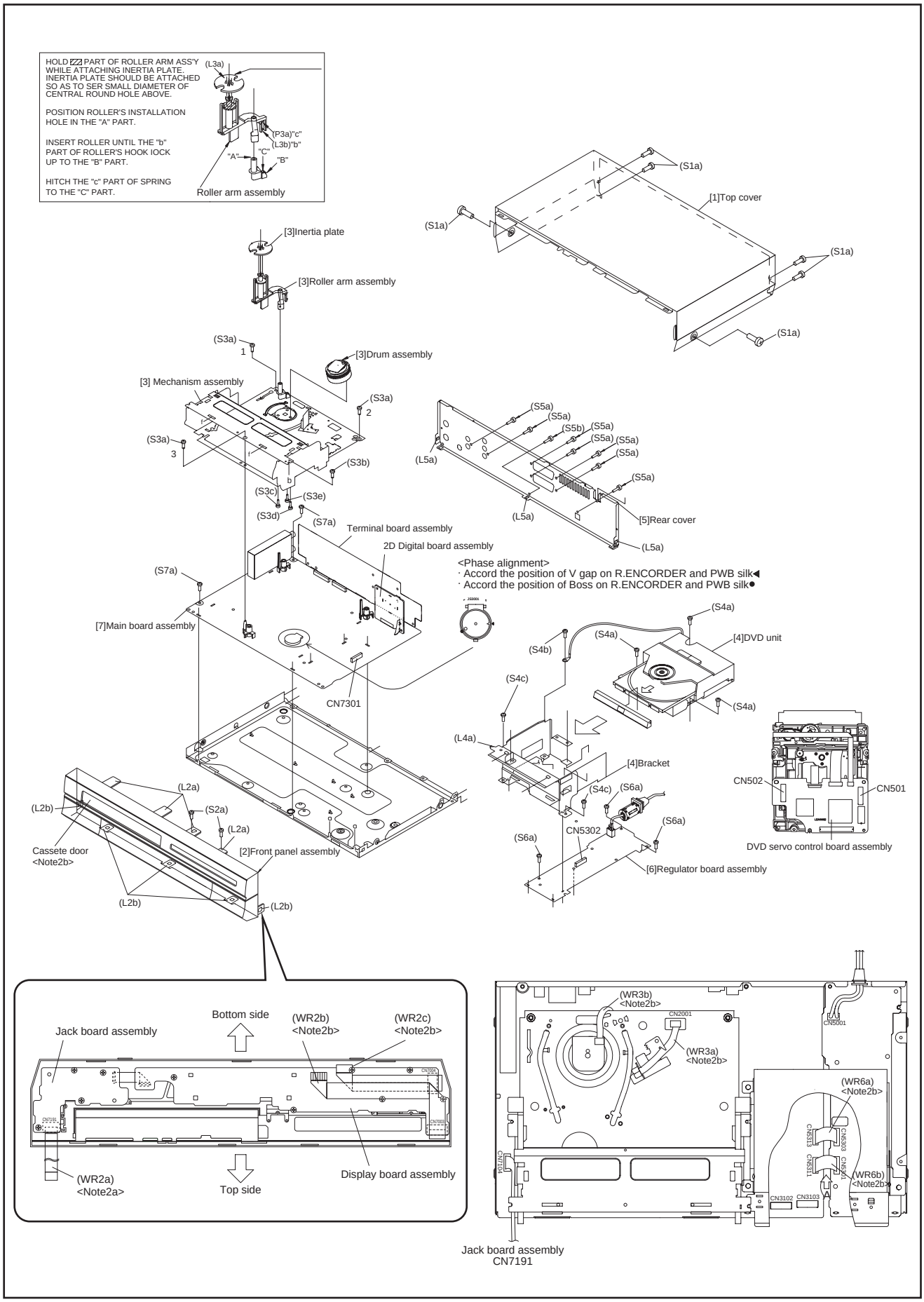
HOLD ▨ PART OF ROLLER ARM ASS'Y WHILE ATTACHING INERTIA PLATE. INERTIA PLATE SHOULD BE ATTACHED SO AS TO SER SMALL DIAMETER OF CENTRAL ROUND HOLE ABOVE.
POSITION ROLLER'S INSTALLATION HOLE IN THE "A" PART.
INSERT ROLLER UNTIL THE "b" PART OF ROLLER'S HOOK IOCK UP TO THE "B" PART.
HITCH THE "c" PART OF SPRING TO THE "C" PART.
(L3a)
(P3a)"c"
(L3b)"b"
"A"
"C"
"B"
Roller arm assembly
(S1a)
[1]Top cover
[3]Inertia plate
[3]Roller arm assembly
(S3a)
1
[3]Drum assembly
[3] Mechanism assembly
(S3a)
2
(S3a)
3
(S3b)
b
(S3c)
(S3e)
(S3d)
(S7a)
Terminal board assembly
2D Digital board assembly
(S5a)
(S5b)
(L5a)
[5]Rear cover
(S7a)
[7]Main board assembly
<Phase alignment>
· Accord the position of V gap on R.ENCORDER and PWB silk◀
· Accord the position of Boss on R.ENCORDER and PWB silk●
CN7301
(S4a)
(S4b)
[4]DVD unit
(S4c)
(L4a)
[4]Bracket
(S6a)
CN5302
[6]Regulator board assembly
CN502
CN501
DVD servo control board assembly
(L2a)
(L2b)
(S2a)
Cassete door
<Note2b>
[2]Front panel assembly
Bottom side
Jack board assembly
(WR2b)
<Note2b>
(WR2c)
<Note2b>
(WR2a)
<Note2a>
Top side
Display board assembly
(WR3b)
<Note2b>
CN2001
(WR3a)
<Note2b>
CN5001
(WR6a)
<Note2b>
CN3103
(WR6b)
<Note2b>
CN3102
Jack board assembly
CN7191

Fig.3-1d

3.2 Loading mechanism assembly

3.2.1 Removing the tray (See Figure 3-2a, Figure 3-2b, Figure 3-2c, Figure 3-2d, Figure 3-2e, Figure 3-2f)

(1) Push **a** of the slide cam on the hole in the right side of the loading base by using a driver until it stops. (See Figure 3-2a.)
(2) The tray comes out. Pull the tray in a front direction until it stops.
(3) Remove the two screws **A** attaching the slide bracket. (See Figure 3-2b.)
(4) Tilt the tray in a direction of the arrow around the point in the left rear part of the tray. (See Figure 3-2c.)
(5) The rail of the tray is removed from **b** of the loading base. Then, remove the tray upward. (See Figure 3-2d.)

Attaching the tray:

Engage **c** of the loading base to the projection of the tray while tilting the tray to the left. Turn the tray in a direction of the arrow, and attach the slide bracket. (See Figure 3-2e.)

Note:

Prior to the procedure above, move the slide cam in a direction of the arrow so that **d** of the slide cam can be inserted in **e** of the tray. (See Figure 3-2f.)

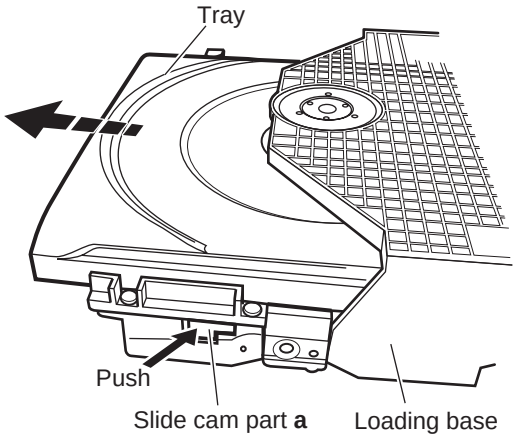

Fig.3-2a

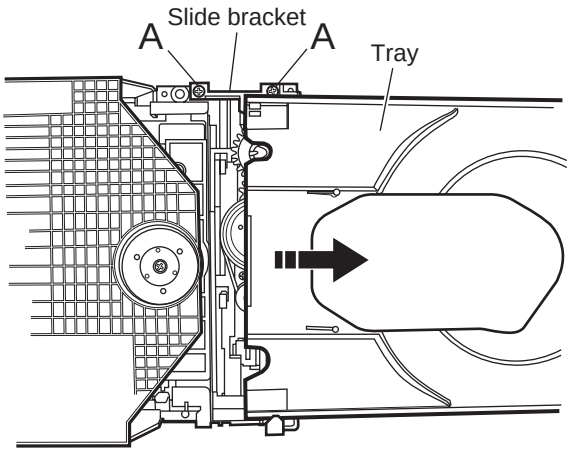

Fig.3-2b

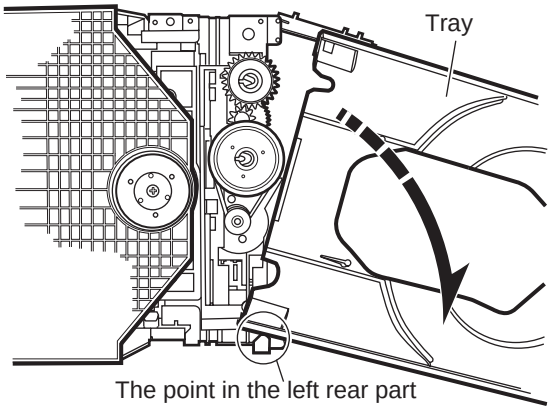

Fig.3-2c

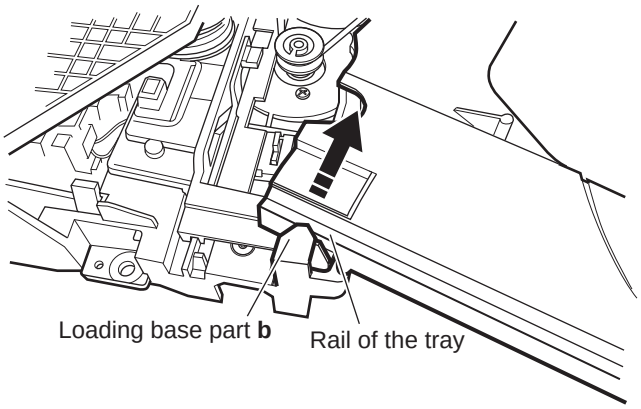

Fig.3-2d

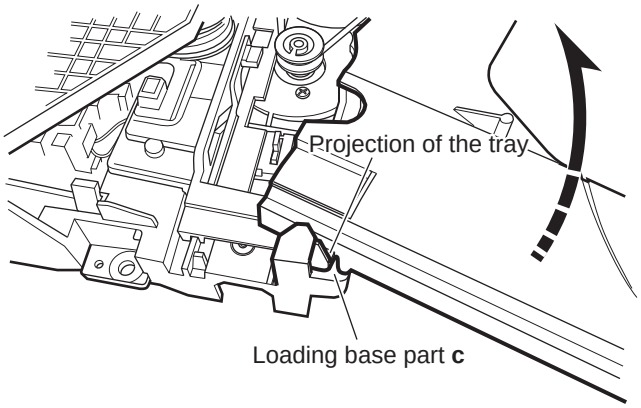

Fig.3-2e

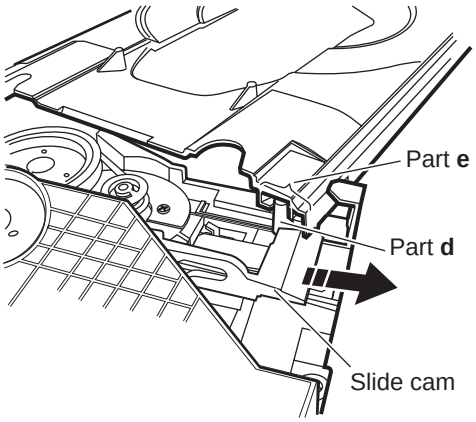

Fig.3-2f

3.2.2 Removing the traverse mechanism assembly (See Figure 3-2g)

Reverse the loading mechanism assembly. Remove the four screws **B** attaching the traverse mechanism assembly. Remove the traverse mechanism assembly upward.

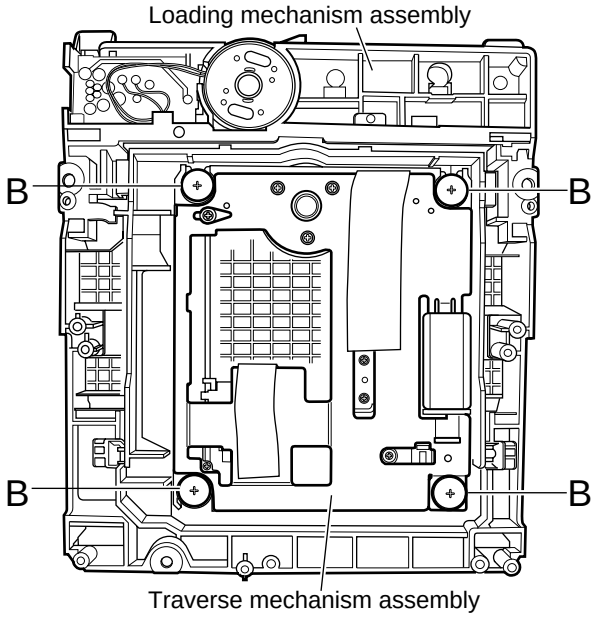

Fig.3-2g

3.2.3 Removing the elevator (See Figure 3-2h and Figure 3-2j)

- Prior to the following procedure, remove the traverse mechanism assembly.
  (1) Remove the two arms of the elevator from the two parts **f** by moving the arms in a direction of the arrow.
  (2) Pull out the elevator in a rear direction.

Attaching the elevator:

Engage the two holes **g** to the two shafts on the front part of the elevator. And then, attach the elevator.

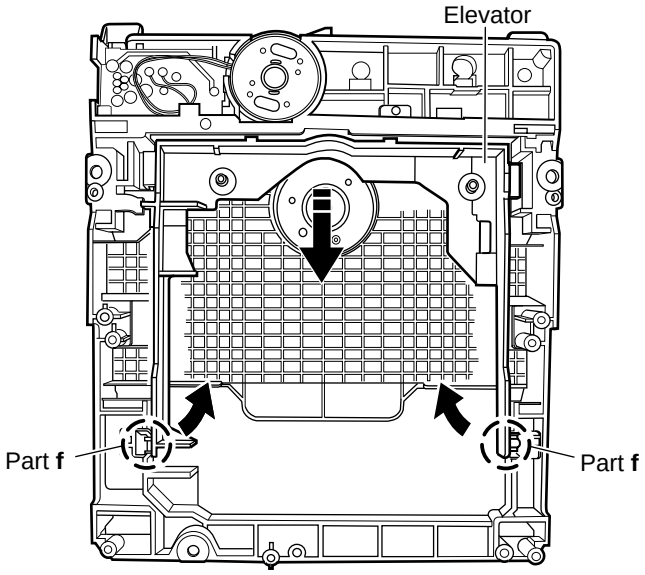

Fig.3-2h

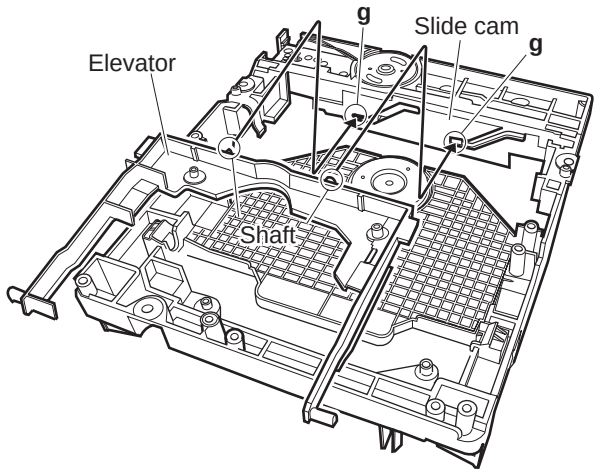

Fig.3-2j

3.2.4 Removing the loading motor (See Figure 3-2k and Figure 3-2l)

- Prior to the following procedure, remove the tray, the traverse mechanism assembly, and the elevator.
  (1) Remove the belt from the pulley.
  (2) Remove two screws **C** attaching the loading motor.
  (3) Remove two solders **h** on the switch board.

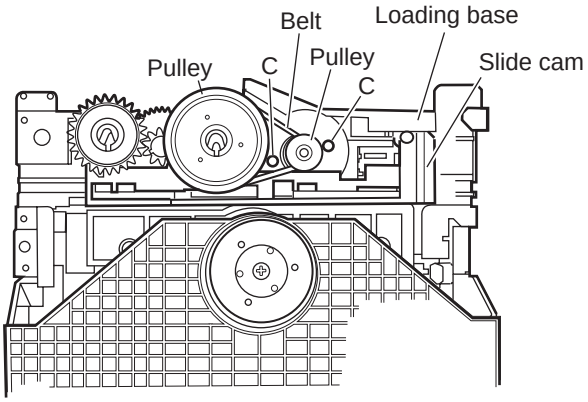

Fig.3-2k

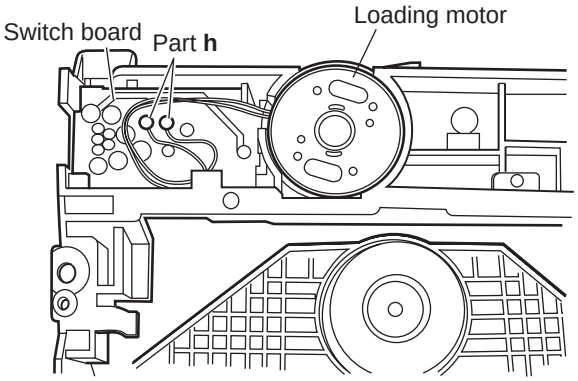

Fig.3-2l

3.3 Traverse mechanism assembly

3.3.1 Removing the pickup (See Figure 3-3a, Figure 3-3b)

- Prior to the following procedure, remove the traverse mechanism assembly.
  (1) Remove one screw **D** attaching the plate.
  (2) Remove the plate and the leaf spring.
  (3) Lift **i** of the shaft **1**, and pull out the shaft **1** from **j**.
  (4) Remove **k** of the pickup from the shaft **2**.

Attaching the pickup:

(1) Engage **k** of the pickup to the shaft **2**.
(2) Insert the shaft **1** in **j**, and attach the shaft 1 to **i**.
(3) Attach the leaf spring, and then attach the plate. Fix the leaf spring and the plate by using the screw **D**.

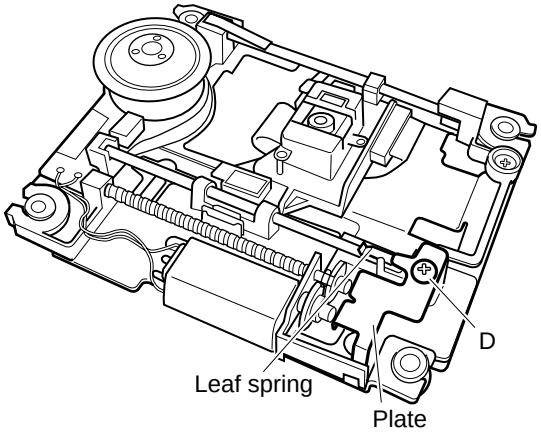

Fig.3-3a

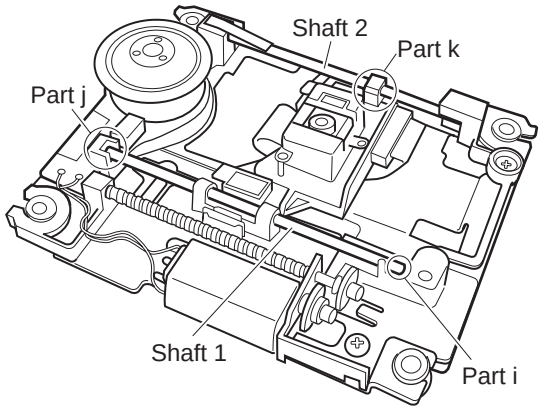

Fig.3-3b

SECTION 4
ADJUSTMENT

4.1 Before adjustment

4.1.1 Precaution

- **The adjustments of this unit include the mechanism compatibility and electrical adjustments. During the performance of this work, be sure to observe the precautions for each type of adjustment.**
- **If there is a reference to a signal input method in the signal column of the adjustment chart, “Ext. S-input” means the Y/C separated video signal and “Ext. input” means the composite video signal input.**
- **Unless otherwise specified, all measuring points and adjustment parts are located on the Main board.**

4.1.2 Required test equipments

- Color (colour) television or monitor
- Oscilloscope: wide-band, dual-trace, triggered delayed sweep
- Signal generator: RF / IF sweep / marker
- Signal generator: stairstep, color (colour) bar [PAL]
- Recording tape
- Digit-key remote controller(provided)

4.1.3 Required adjustment tools

○ : Used --- : Not used

	Mechanism compatibility adjustment	Electrical adjustment
Roller driver	○	---
Jig RCU	---	○
Back tension cassette gauge	○	---
Alignment tape(MHPE)	○	---
Alignment tape(MHPE-L)	○	○
Alignment tape(MHP-L)	---	○

Roller driver PTU94002	Jig RCU PTU94023B	Back tension cassette gauge PUJ48076-2
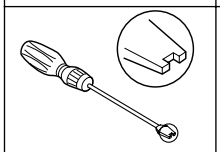	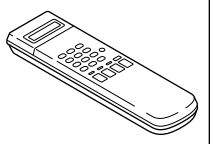	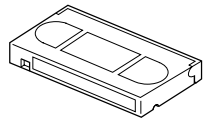
Alignment tape (SP, stairstep, PAL) MHPE	Alignment tape (LP, stairstep, PAL) MHPE-L	DVD test disc VT-501
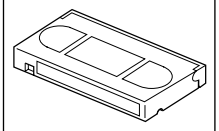	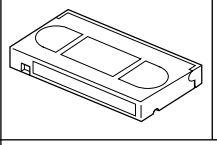	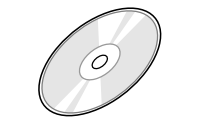
CD-DA test disc CTS-1000		
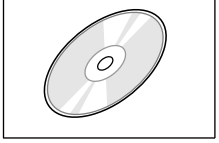		

4.1.4 Color (colour) bar signal,Color (colour) bar pattern

- **Colour bar signal [PAL]**

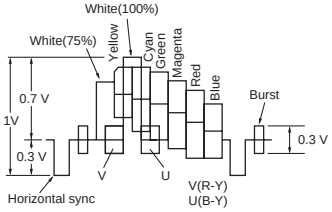

- **Colour bar pattern [PAL]**

4.1.5 Switch settings

When adjusting this unit, set the VCR mode and switches as described below.

- When using the Jig RCU, it is required to set the VCR to the Jig RCU mode. (See "SECTION 2 SPECIFIC SERVICE INSTRUCTIONS")

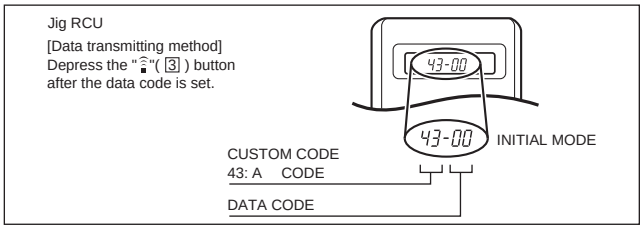

Fig.4-1a Jig RCU [PTU94023B]

- Set the switches as shown below unless otherwise specified on the relevant adjustment chart. The switches that are not listed below can be set as desired.
  If the VCR is not equipped with the functions detailed below, setup is not required.

AUTO PICTURE/VIDEO CALIBRATION/ B.E.S.T./D.S.P.C.	OFF
PICTURE CONTROL/SMART PICTURE	NORMAL/NATURAL
VIDEO STABILIZER	OFF
TBC	ON
Digital 3R	ON
VIDEO NAVIGATION/TAPE MANAGER	OFF
BLUE BACK	OFF

4.1.6 Manual tracking mode (Auto tracking ON/OFF) setting

(1) In order to set to the manual tracking mode during tape playback, press the “SP/EP(LP)”button on the remote control unit.
  - Each press of the button switches the auto tracking ON or OFF.
  - When the manual tracking mode is set, the tracking is placed at the center position.

(2) Press “channel +/-” to adjust the tracking manually.

4.1.7 EVR Adjustment

Some of the electrical adjustments require the adjustment performed by the EVR system. The main unit have EEPROMs for storing the EVR adjustment data and user setups.

Notes:

- **In the EVR adjustment mode, the value is varied with the channel buttons (+, –). The adjusted data is stored when the setting mode changes (from PB to STOP, when the tape speed is changed, etc.). Take care to identify the current mode of each adjustment item when making an adjustment.**
- **When changing the address setting in the EVR adjustment mode, use the Jig RCU or the remote controller having numeric keypad with which a numeric code can be directly input.**
  The remote control code of the Jig RCU corresponds to each of the digit keys on the remote controller as follows.

Digit-key	0	1	2	3	4	5	6	7	8	9
Code	20	21	22	23	24	25	26	27	28	29

- **As the counter indication and remaining tape indication are not displayed FDP during the EVR adjustment mode, check them on the TV monitor screen.**
- **When performing the EVR adjustment, confirm that the FDP indication is changed to the EVR mode, as shown below.**

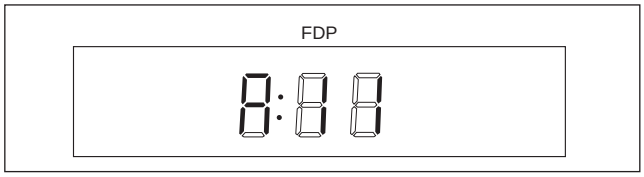

Fig.4-1b EVR mode

4.2 Mechanism compatibility adjustment [VHS SECTION]

Notes:

- **Although compatibility adjustment is very important, it is not necessary to perform this as part of the normal servicing work. It will be required when you have replaced the A/C head, drum assembly or any part of the tape transport system.**
- **To prevent damaging the alignment tape in the compatibility adjustment, prepare a cassette tape (for self-recording/playback), perform a test on it by transporting it and making sure that the tape is not bent by the tape transport mechanisms such as in the guide rollers.(See Fig.4-2b.)**

4.2.1 Tension pole position

Notes:

- **This adjustment must be performed every time the tension band is replaced.**

Signal	(A)	• Back tension cassette gauge [PUJ48076-2]
Mode	(B1) (B2)	• PB • Eject end
Adjustment part	(F)	• Adjust pin [Mechansim assembly]
Specified value	(G)	• 25 - 51 gfcm (2.45 - 5 x 10^{-3} Nm)

(1) Play back the back tension cassette gauge (A).
(2) Check that the indicated value on the left side gauge is within the specified value (G).
(3) If the indicated value is not within the specified value (G), perform the adjustment in a following procedure.(See Fig.4-2a.)
  a) Remove the top frame, cassette holder and side frames (L/R) all together. (refer to the SERVICE MANUAL No.86700 [MECHANISM ASSEMBLY].)
  b) Rotate the loading motor gear to move the control plate so that the triangular stamping to the left of the “P”stamping is aligned with the stamping (a) on the main deck. This positioning is mode (B1).
  c) Adjust by turning the adjustment pin so that the tip of the tension arm is aligned with the stamping (b) on the main deck.
  d) Rotate the reel disk (S) by about one turn clockwise and make sure that the round hole of the adjustment pin is located in the “OK” range. If it is outside this range, restart the adjustment from the beginning.

After completion of the adjustment, rotate the loading gear motor to return it to the mode (B2) position.

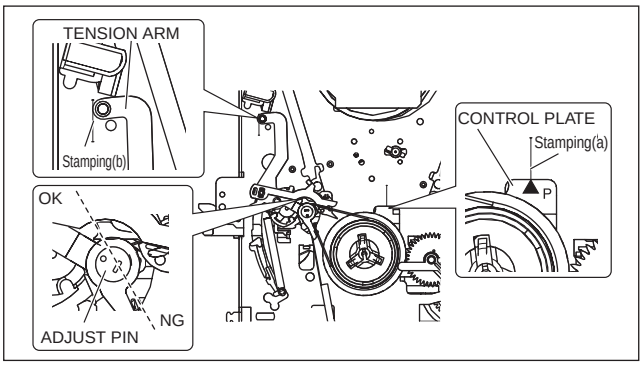

Fig.4-2a

4.2.2 FM waveform linearity

Signal	(A1) (A2)	• Alignment tape(SP, stairstep, PAL) [MHPE] • Alignment tape(LP, stairstep, PAL) [MHPE-L]
Mode	(B)	• PB
Equipment	(C)	• Oscilloscope
Measuring point	(D)	• TP106 (PB. FM)
External trigger	(E)	• TP111 (D.FF)
Adjustment part	(F)	• Guide roller [Mechanism assembly]
Specified value	(G)	• Flat V.PB FM waveform
Adjustment tool	(H)	• Roller driver [PTU94002]

(1) Play back the alignment tape (A1).
(2) Apply the external trigger signal to D.FF (E), to observe the V.PB FM waveform at the measuring point (D).
(3) Set the VCR to the manual tracking mode.
(4) Make sure that there is no significant level drop of the V.PB FM waveform caused by the tracking operation, with its generally parallel and linear variation ensured. Perform the following adjustments when required. (See Fig. 4-2c.)
(5) Reduce the V.PB FM waveform by the tracking operation. If a drop in level is found on the left side, turn the guide roller of the pole base assembly (supply side) with the roller driver to make the V.PB FM waveform linear.
If a drop in level is on the right side, likewise turn the guide roller of the pole base assembly (take-up side) with the roller driver to make it linear. (See Fig. 4-2c.)
(6) Make sure that the V.PB FM waveform varies in parallel and linearly with the tracking operation again. When required, perform fine-adjustment of the guide roller of the pole base assembly (supply or take-up side).
(7) Unload the cassette tape once, play back the alignment tape (A1) again and confirm the V.PB FM waveform.
(8) After adjustment, confirm that the tape wrinkling does not occur at the roller upper or lower limits. (See Fig. 4-2b.) [Perform adjustment step (9) only for the models equipped with SP mode and EP (or LP) mode.]

[Perform adjustment step (9) only for the models equipped with SP mode and EP (or LP) mode.]

(9) Repeat steps (1) to (8) by using the alignment tape (A2).

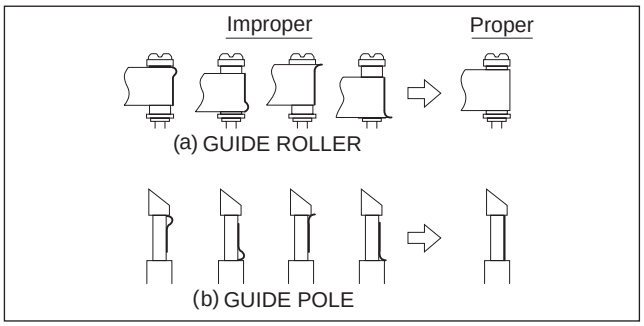

Fig.4-2b

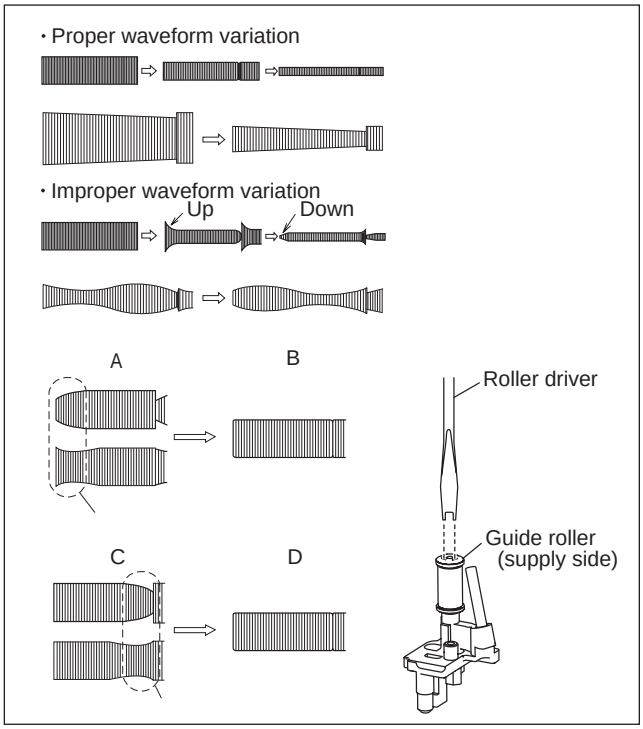

Fig.4-2c

4.2.3 Height and tilt of the A/C head

Note:

- ***Set a temporary level of the height of the A/C head in advance to make the adjustment easier after the A/C head has been replaced. (Refer to the SERVICE MANUAL No.86700 [MECHANISM ASSEMBLY].)***

Signal	(A)	• Alignment tape(SP, stairstep, PAL) [MHPE]
Mode	(B)	• PB
Equipment	(C)	• Oscilloscope
Measuring point	(D1) (D2)	• AUDIO OUT terminal • TP4001 (CTL. P)
External trigger	(E)	• TP111 (D.FF)
Adjustment part	(F)	• A/C head [Mechanism assembly]
Specified value	(G)	• Maximum waveform

(1) Play back the alignment tape (A).
(2) Apply the external trigger signal to D.FF (E), to observe the AUDIO OUT waveform and Control pulse waveform at the measuring points (D1) and (D2) in the ALT mode.
(3) Set the VCR to the manual tracking mode.
(4) Adjust the AUDIO OUT waveform and Control pulse waveform by turning the screws (1), (2) and (3) little by little until both waveforms reach maximum. The screw (1) and (3) are for adjustment of tilt and the screw (2) for azimuth.

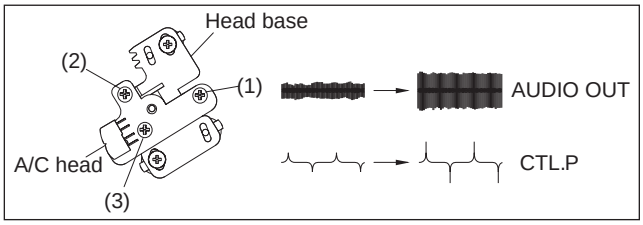

Fig.4-2d

4.2.4 A/C head phase (X-value)

Signal	(A1) (A2)	• Alignment tape(SP, stairstep, PAL) [MHPE] • Alignment tape(LP,stairstep,PAL) [MHPE-L]
Mode	(B)	• PB
Equipment	(C)	• Oscilloscope
Measuring point	(D)	• TP106 (PB. FM)
External trigger	(E)	• TP111 (D.FF)
Adjustment part	(F)	• A/C head base [Mechanism assembly]
Specified value	(G)	• Flat V.PB FM waveform
Adjustment tool	(H)	• Roller driver [PTU94002]

(1) Play back the alignment tape (A1).
(2) Apply the external trigger signal to D.FF (E), to observe the V.PB FM waveform at the measuring point (D).
(3) Set the VCR to the manual tracking mode.
(4) Loosen the screws (4) and (5), then set the Roller driver to the innermost projected part of the A/C head. (See Fig. 4-2e.)
(5) Rotate the roller driver so that the A/C head comes closest to the capstan. From there, move the A/C head back gradually toward the drum until the point where the FM waveform is maximized for the second time, and then tighten the screws (4) and (5) temporarily.
(6) Play an alignment tape (A2) and set to the manual-tracking mode.
(7) Fine-adjust A/C head base position to maximize the FM waveform, and then tighten the screws (4) and (5) firmly.
(8) Play alignment tapes (A1) and (A2) and confirm that the FM waveforms are maximized when the tracking is at the center position.

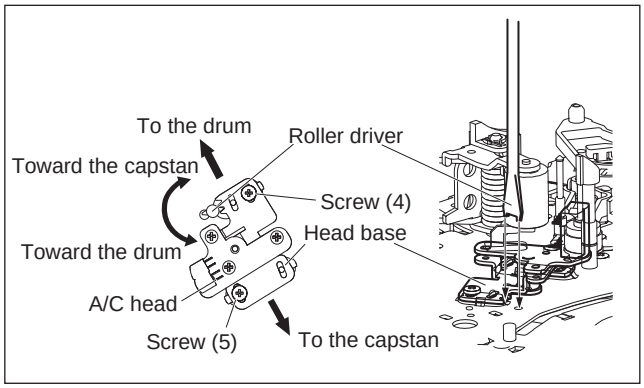

Fig.4-2e

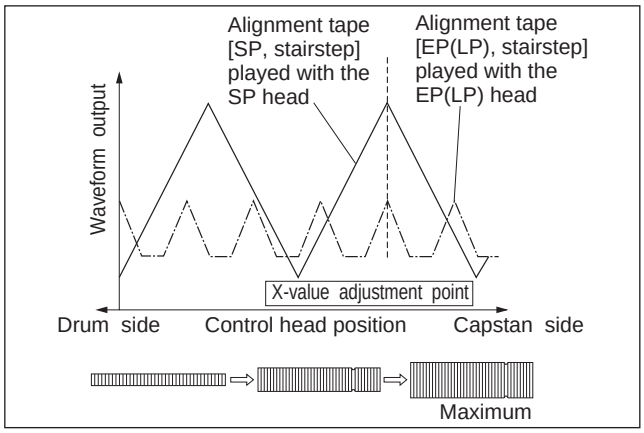

Fig.4-2f

4.3 Electrical adjustment [VHS SECTION]

Note:

The following adjustment procedures are not only necessary after replacement of consumable mechanical parts or board assemblies, but are also provided as references to be referred to when servicing the electrical circuitry.

In case of trouble with the electrical circuitry, always begin a service by identifying the defective points by using the measuring instruments as described in the following electrical adjustment procedures. After this, proceed to the repair, replacement and/or adjustment. If the required measuring instruments are not available in the field, do not change the adjustment parts (variable resistor, etc.) carelessly.

4.3.1 Servo circuit

4.3.1.1 Switching point

Signal	(A1) (A2)	• Stairstep signal • Alignment tape(LP,stairstep,PAL) [MHPE-L]
Mode	(B)	• PB
Equipment	(C)	• Oscilloscope
Measuring point	(D)	• VIDEO OUT terminal (75 ohm terminated) • TP106 (PB. FM)
External trigger	(E)	• TP111 (D.FF)
Adjustment part	(F)	• Jig RCU: Code “5A”
Specified value	(G)	• 6.5±0.5H (VHS models) • 7.5±0.5H (S-VHS models)
Adjustment tool	(H)	• Jig RCU [PTU94023B]

(1) Play back the signal (A1) of the alignment tape (A2).
(2) Apply the external trigger signal to D.FF (E) to observe the VIDEO OUT waveform and V.PB FM waveform at the measuring points (D1) and (D2).
(3) Set the VCR to the manual tracking mode.
(4) Adjust tracking so that the V.PB FM waveform becomes maximum.
(5) Set the VCR to the Auto adjust mode by transmitting the code (F) from the Jig RCU. When the VCR enters the stop mode, the adjustment is completed.
(6) If the VCR enters the eject mode, repeat steps (1) to (5) again.
(7) Play back the alignment tape (A2) again, confirm that the switching point is the specified value (G).

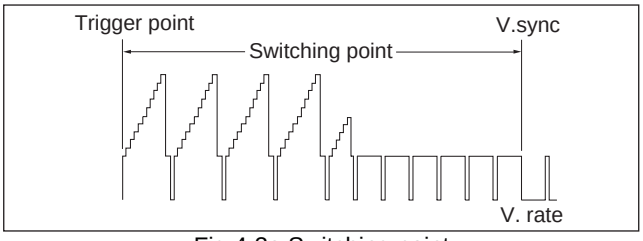

Fig.4-3a Switching point

4.3.1.2 Slow tracking preset

Signal	(A1) (A2)	• Ext. input • Color (colour) bar signal [PAL]
Mode	(B1) (B2)	• VHS SP • VHS LP
Measuring point	(D)	• TV-Monitor
Adjustment part	(F)	• Jig RCU: Code “71”or “72”
Specified value	(G)	• minimum noise
Adjustment tool	(H)	• Jig RCU [PTU94023B]

(1) Record the signal (A2) in the mode (B1), and play back the recorded signal.
(2) Set the VCR to the manual tracking mode.
(3) Set the VCR to the FWD slow (+1/6x) mode.
(4) Transmit the code (F) from the Jig RCU to adjust so that the noise bar becomes the specified value (G) on the TV monitor in the slow mode.
(5) Set the VCR to the Stop mode.
(6) Confirm that the noise bar is (G) on the TV monitor in the slow mode.
(7) Repeat steps (3) to (6) in the REV slow (-1/6x) mode.
(8) Repeat steps (1) to (7) in the mode (B2).

Note:

- **For FWD slow (+1/6x) playback, transmit the code "08" from the Jig RCU to enter the slow playback mode, and transmit the code "D0"for REV slow (-1/6x) mode.**

4.3.2 Video circuit

4.3.2.1 EE Y/PB Y (S-VHS) level

Signal	(A1) (A2) (A3)	• Ext. S-input • Ext. input • Color (colour) bar signal [PAL]
Mode	(B1) (B2) (B3)	• EE SP • S-VHS SP • VHS SP
Equipment	(C)	• Oscilloscope
Measuring point	(D)	• Y OUT terminal
EVR mode EVR address	(F1) (F2) (F3) (F4)	• Jig code "57" • A : 11 • Jig code "21" twice • Jig code "18" or "19" (Channel +/-)
Specified value	(G)	• 1.00 ± 0.05 Vp-p (75 ohm terminated)
Adjustment tool	(H)	• Jig RCU [PTU94023B]

(1) Input the signal (A3) from the input point (A1).
(2) Set the VCR to the mode (B1).
(3) Observe the Y OUT waveform at the measuring point (D).
(4) Set the VCR to the EVR mode by transmitting the code (F1) from the Jig RCU.
(5) Set the EVR address to (F2) by transmitting the code (F3) from the Jig RCU.
(6) Transmit the code (F4) from the Jig RCU to adjust so that the Y level of the Y OUT waveform becomes the specified value (G).
(7) Release the EVR mode of the VCR by transmitting the code (F1) from the Jig RCU again. (When the EVR mode is released, the adjusted data is memorized.)
(8) Input the signal (A3) from the input point (A2).
(9) Repeat steps (3) to (7) in the mode (B1).
(10) Record the signal (A3) in the mode (B2), and play back the recorded signal.
(11) Set the VCR to the manual tracking mode.
(12) Repeat steps (3) to (7) in the mode (B2).
(13) Record the signal (A3) in the mode (B3), and play back the recorded signal.
(14) Set the VCR to the manual tracking mode.
(15) Repeat steps (3) to (7) in the mode (B3).

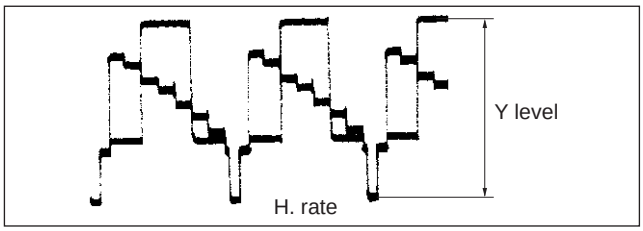

Fig.4-3b EE Y/PB Y lebel

4.3.3 Syscon circuit

Notes:

- **When perform this adjustment, remove the Mechanism assembly.**

4.3.3.1 Timer clock

Signal	(A1)	• No signal
Mode	(B)	• EE
Equipment	(C)	• Frequency counter
Measuring point	(D1) (D2) (D3)	• IC3001 pin 44 • IC3001 pin 103 • C3054 + and -
Adjustment part	(F)	• C3025 (TIMER CLOCK)
Specified value	(G)	• 1024.008 ± 0.001 Hz (976.5549 ± 0.0010 usec)

(1) Connect the frequency counter to the measuring point (D1).
(2) Connect the short wire between the short point (D2) and Vcc (5V).
(3) Short the leads of capacitor (D3) once in order to reset the microprocessor of the Syscon.
(4) Disconnect the short wire between the short point (D2) and Vcc then connect it again.
(5) Adjust the Adjustment part (F) so that the output frequency becomes the specified value (G).

4.3.4 Audio circuit [S-VHS models]

Notes:

- **GND (Ground) should be taken from the Tuner shield case.**

4.3.4.1 Audio REC FM

Signal	(A1) (A2) (A3)	• Ext. input • Audio: No signal • Video: Color (colour) bar signal [PAL]
Mode	(B)	• S-VHS LP
Equipment	(C)	• Oscilloscope
Measuring point	(D)	• TP2253 (A. PB. FM)
External trigger	(E)	• TP111 (D.FF)
Adjustment part	(H)	• VR2251 (REC. FM)
Specified value	(G1) (G2)	• 600 ± 100 mVp-p • More than 400 mVp-p

(1) Apply the external trigger signal to D.FF (E) to observe the Audio PB FM waveform at the measuring point (D).
(2) Record the signal (A3) with no audio signal input in the mode (B), and play back the recorded signal.
(3) Set the VCR to the manual tracking mode.
(4) If the A.PB FM level is not within the specified value (G1), perform the adjustment in a following procedure.
(5) Adjust the adjustment part(F) so that the A. PB FM level of the higher channel level becomes the specified value(G1). (Adjust before recording, then confirm it by playing back.)
(6) If specified value(G1) is not obtained, adjust the Adjustment part(F) so that the waveform level of the lower channel level becomes the specified value(G2).(Adjust before recording, then confirm it by playing back.)

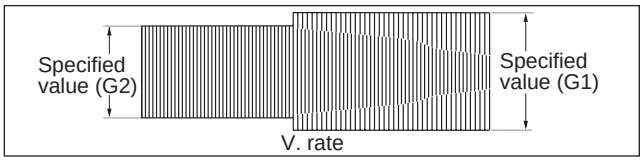

Fig.4-3c Audio REC FM

4.4 Electrical adjustment (DVD SECTION)

4.4.1 Test mode setting method

(1) Press POWER button then press VCR/DVD repeatedly so that the DVD indicatorlights up.
(2) Press the POWER button again to set the stand-by mode.
(3) Transmit the code "FA" from the Jig RCU.
(4) The FDP shows the test mode content in the form of "∗ 0 ∗".
(5) To release test mode, press "POWER" key of the front panel.
(6) Each pressing of "SET UP MENU" key of the remote controller in test mode changes the mode as follows.

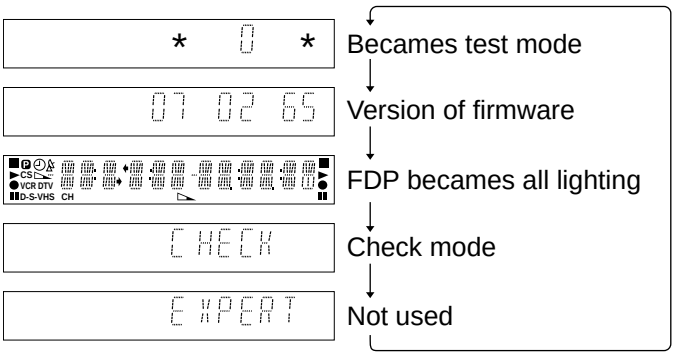

4.4.2 Method of displaying version of firmware

(1) Set the main body at test mode.
(2) Press "SET UP MENU" key of the remote controller once. Then, version number and alphabetical letter of the system controller and the back end are displayed in the FL display as follows:

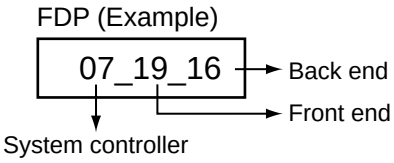

4.4.3 Initialization method

Please initialize according to the following procedures in the following case:

- Just after you upgrade the firmware.
- After you confirm the symptoms that a customer points out. First Initialize, and then confirm whether the symptoms are improved or not.
- After servicing, before returning the main body to a customer. (Initialized main body should be returned to a customer.)
  (1) Set the main body at test mode.
  (2) Press "PAUSE" key of the front panel or transmit the code "6F" from the Jig RCU.
  (3) When initialization is completed, the FDP changes from "∗0" to "∗00".(The left "0" of "00" is not always "0". It shows parameter adjustment status.)

4.4.4 All-initialization method

Please perform all-initialization according to the following procedures in the following case:

- Just after you exchange the pick-up.
- Just after you exchange the spindle motor.
- Just after you exchange the traverse mechanism base.

NOTE:
Please perform all-initialization when you exchange the parts above and also when you remove the parts above.

- Just after the flap adjustment of the pick-up guide shaft
  (1) Set the main body at test mode.
  (2) Press the "REVERSE SKIP/INDEX (⏮)" key of the remote controller for more than 2 seconds.
  (3) When all-initialization is completed, the FDP changes from "∗0" to "∗33".

NOTE:
After all-initialization, be sure to perform optimization adjustment of Front End parameter.

4.4.5 Optimization adjustment of Front End parameter

Adjustment to optimize Front End parameter must be performed in each mechanism assembly of this model for high-speed starting.Please perform optimization according to the following procedures just after all-initialization is completed and when FL display shows anything except "∗0" (For example when FDP shows "∗1", "∗2", and "∗3") at test mode.

(1) Press "POWER" button of the front panel to turn the main body on (not to set the main body at test mode).
(2) Insert the test disc VT-501 or commercial dual-layer DVD software.
(3) Remove the disc when the FL display changes from "READ" to disc information.
(4) Perform the same procedures as in (2) and (3) above by using the test disc CTS-1000 or commercial CD-DA software.
(5) Set the main body at test mode, and check that the FDP shows "∗0".

NOTE:

Status of this adjustment can be judged by the number displayed at test mode as follows:

DVD adjustment	CD adjustment	FDP at test mode
Adjusted	Adjusted	∗0
Not adjusted	Adjusted	∗1
Adjusted	Not adjusted	∗2
Not adjusted	Not adjusted	∗3

NOTE:

As for a disc used for adjustment,

- Disc should be mounted. ("Mounting" means to display "READ" after the disc is inserted and then display the disc information.) Disc need not be played.
- If you do not have test disc either VT-501 (DVD) or CTS-1000 (CD-DA), use a commercial disc (for DVD, dual-layer software) after seeing and checking that the disc is neither curved nor foreseen that it may shake at the time of playback.If you use a disc with bad features, starting time may be slow or disc may not be read.

4.4.6 Display of current value of laser

(1) Set the main body at test mode.
(2) Press "SET UP MENU" key of the remote controller three times. Then, FDP is displayed "CHECK".
(3) The laser current value can be switched between the value of CD and that of DVD by pressing the following key of the remote controller.

FDP (Example)

2530 ****

Remote controller "4" key --- Laser of CD
Remote controller "5" key --- Laser of DVD

The number shown in the FDP shows mA of current value of laser.The first two numbers ("25" in "2530") shows current value of laser at the time of adjustment after the latest all-initialization, 25mA in this example.The last two numbers ("30" in "2530") shows the present current value of laser, 30mA in this example.The first two numbers ("25" in "2530") usually shows current value of laser at the time of shipment, so you can see how the product has been deteriorated by comparing the first two numbers ("25" in "2530") and the last two numbers ("30" in "2530").

CD:

The laser current value of 65 mA or less is normal.The laser current value of over 66 mA is not normal. Laser diode of the pickup has been deteriorated.

DVD:

The laser current value of 80 mA or less is normal.The laser current value of over 81 mA is not normal. Laser diode of the pickup has been deteriorated.

To return to test mode, press "STOP" button of the front panel.

4.4.7 Flap adjustment of the pick-up guide shaft

Please perform flap adjustment of the pick-up guide shaft in the following case:

- Just after you exchange the pick-up.
- Just after you exchange the spindle motor.
- Just after you exchange the traverse mechanism base.

NOTE:

Please perform flap adjustment of the pick-up guide shaft when you exchange the parts above and also when you remove the parts above.

- When the reading accuracy of the signal is bad (There is a block noise in the screen, Screen stops in the outer circumference of a disc, etc.)

4.4.7.1 Tool for adjustment

* The screwdriver

good on the market

* Test disc

part number : VT-501

*Stud

part number : JIGXVS40 (Note: One of the four studs is not used here.)

* Extension cord

part number : EXTXV521CB

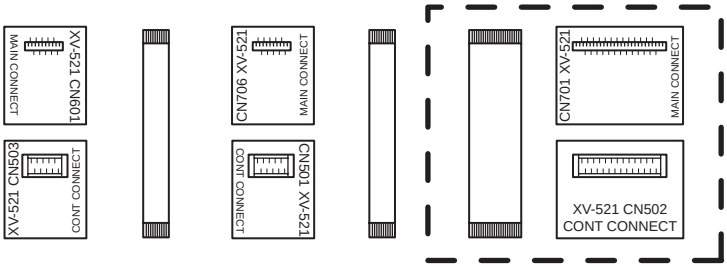

Used two set of this part.

4.4.7.2 Preparation for adjustment

(1) Remove the DVD unit.(Refer to the SECTION 3 Removing the major parts)
(2) Connect a extention cord between CN502 of DVD servo control board assembly and CN7301 of Main board assembly. (See Fig.4-4a)
(3) Connect a extention cord between CN501 of DVD servo control board assembly and CN5302 of Regulator board assembly. (See Fig.4-4a)
(4) Remove the DVD servo control board assembly attached the DVD unit.
(5) Three stud is attached in a DVD unit. (See Fig.4-4b)

NOTE:
The connector of an extended code (right or reverse) since direction of which is also connectable, be careful of the direction which a relay wire inserts enough It will become the cause of failure if especially a Regulator board side is mistaken.

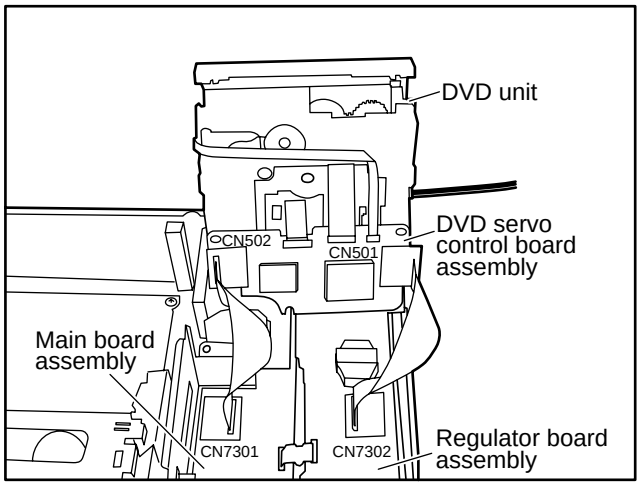

Fig.4-4a

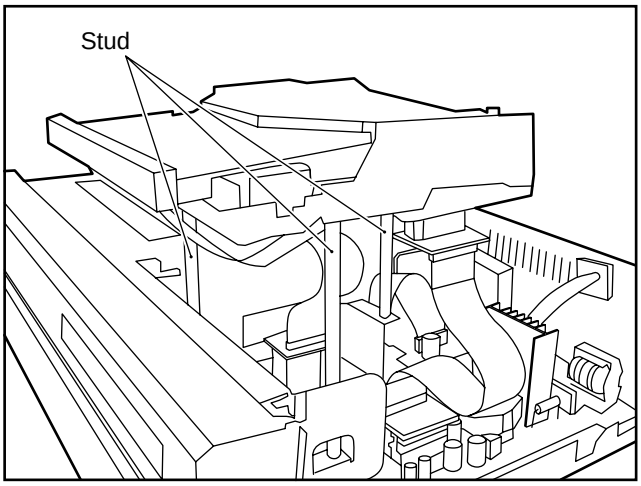

Fig.4-4b

4.4.7.3 Adjustment

(1) Set the main body at test mode.
(2) Press the "SET UP MENU" key of the remote controller three times, and the FDP is displayed "CHECK".
(3) Insert a test disc (VT-501), and press the "PLAY" button of the front panel.
(4) After a few seconds, press the numeric key "6" of the remote controller. Then, the FDP is displays a jitter value.
(5) Turn the adjustment screws on the underside of the traverse mechanism with screw driver until the maximum jitter value is displayed on the FDP. (In this model, a bigger jitter value means a better result.)

NOTE:

- Reference values to judge whether the jitter is allowable or not are displayed, instead of actual jitter values.
- Please be sure to perform "all-initialization" and "optimization adjustment of front end parameter" after adjusting.

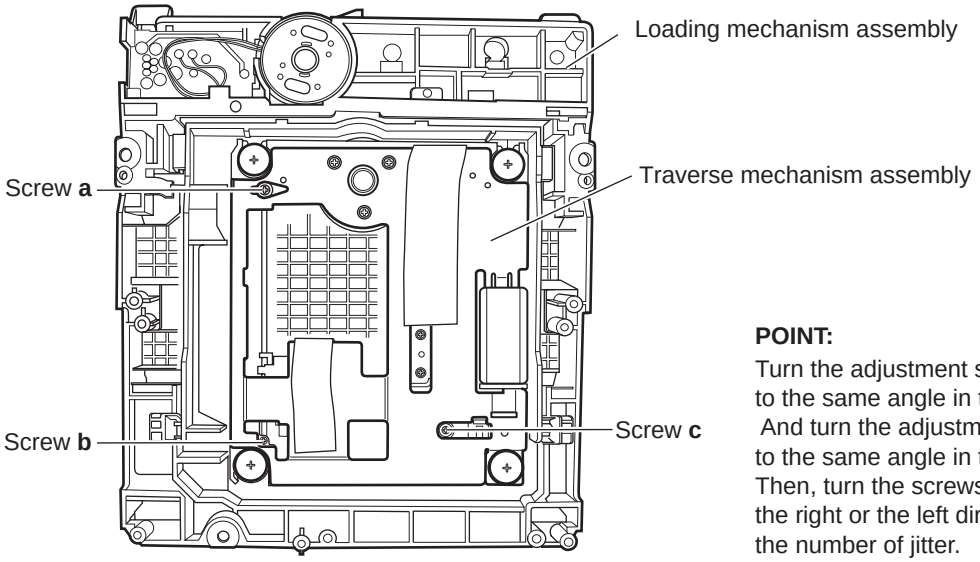

POINT:
Turn the adjustment screws **a** and **b** to the same angle in the right direction.
And turn the adjustment screws **a** and **b** to the same angle in the left direction.
Then, turn the screws **a** and **b** in either the right or the left direction to increase the number of jitter.
Don't turn the adjustment screw **c**.

FDP (Example)

1241 ****

Remote controller "6" key-Jitter value

SECTION 5
TROUBLESHOOTING

5.1 Manually removing the cassette tape

If you cannot remove the cassette tape which is loaded because of any electrical or mechanical failures, manually remove it by taking the following steps.

(1) Unplug the power cord plug from the power outlet.
(2) Refer to the disassembly procedure of the VCR and perform the disassembly of the major parts before removing the mechanism assembly. (See Fig. 5-1a)

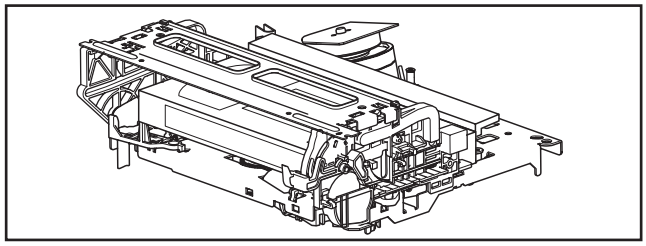

Fig.5-1a

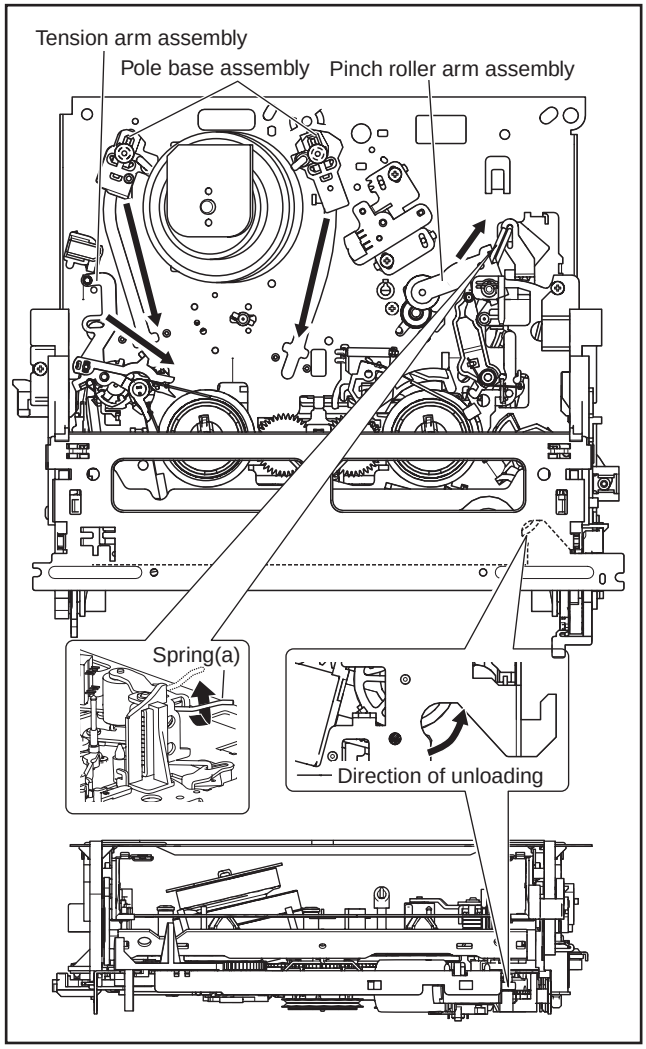

Fig.5-1b

(3) Unload the pole base assembly by manually turning the gear of the loading motor until the pole base assembly is hidden behind the cassette lid. In doing so, hold the tape by the hand to keep the slack away from any grease. (See Fig.5-1b)
In case of mechanical failures, while keeping the tension arm assembly free from tension, pull out the tape on the pole base assembly. Take the spring(a) of the pinch roller arm assembly off the hook, and detach it from the tape.
(4) Remove the screw (a) of the side frame (L/R).
(5) Hold the slack tape and cassette cover together, lift the cassette tape, top frame, cassette holder and side frames (L, R) together from the rear and remove them by dis-engaging the hooks (a) and (b).

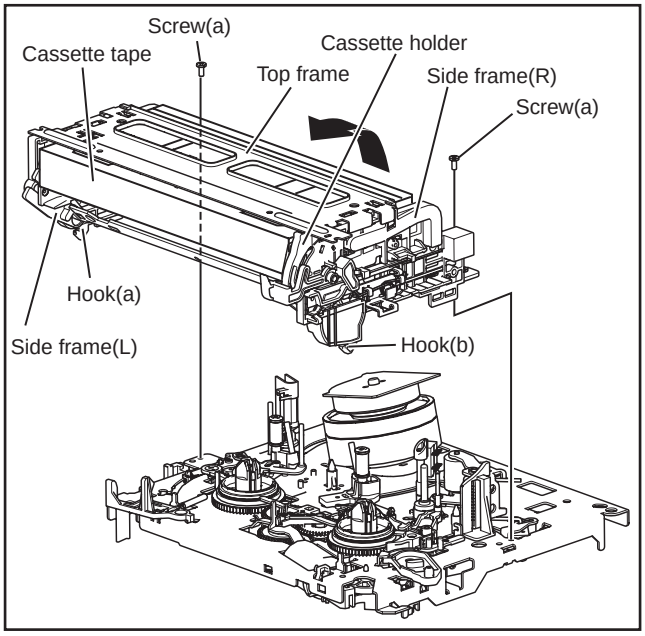

Fig.5-1c

(6) Take up the slack of the tape into the cassette. This completes removal of the cassette tape.

5.2 Manually removing the disk(DVD/CD)

If you cannot remove the disk which is loaded because of any electrical or mechanical failures, manually remove it by taking the following steps.

(1) Unplug the power cord plug from the power outlet.
(2) Remove the top cover and front panel assembly.
(Refer to the disassembly procedure and perform the disassembly of the major parts before removing)
(3) Turn the Middle gear (a) by hand to open the disk tray.(See Fig. 5-2a)

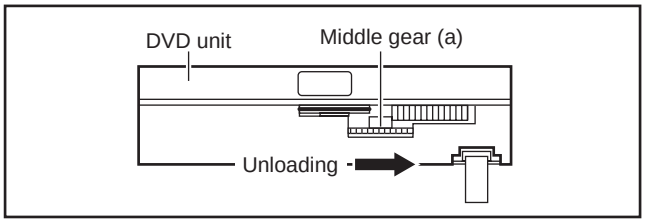

Fig.5-2a

5.3 Emergency display function (VHS SECTION)

This unit saves details of the last two emergencies as the EMG history and allows the status of the VCR and the mechanism of each emergency to be shown both on the display and as OSD information.
When using the emergency function, it is required to set the VCR to the Jig RCU mode.

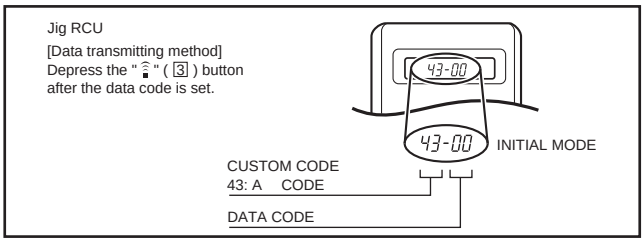

Fig.5-3a Jig RCU [PTU94023B]

5.3.1 Displaying the EMG information

The EMG detail of information can be displayed by transmitting the code "59" from the Jig RCU.

Note:

- **The EMG detail information <1><2> show the information on the latest EMG.**
  It becomes " - - : - - : - - " when there is no latest EMG record.

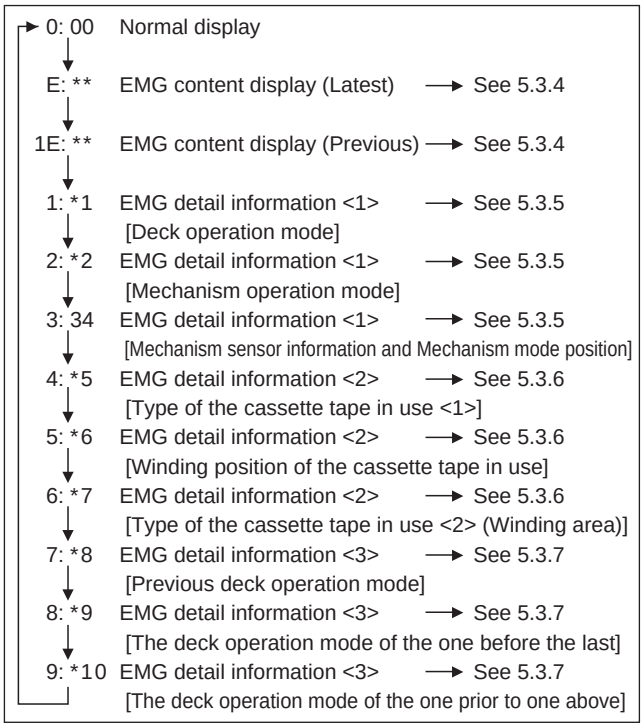

EMG display of 7 FDP display model
Fig.5-3b

EMG display of FDP display mode

(1) Transmit the code "59" from the Jig RCU.
The FDP shows the EMG content in the form of "E:**:**".

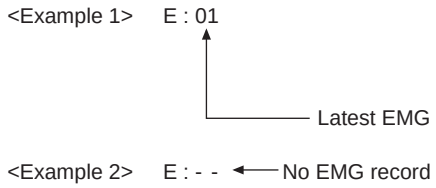

(2) Transmit the code "59" from the Jig RCU again.
The FDP shows the EMG detail information <1> in the form of " *1: *2 : 34 ".

*1 : Deck operation mode at the moment of EMG
*2 : Mechanism operation mode at the moment of EMG
3- : Mechanism sensor information at the moment of EMG
-4 : Mechanism mode position at the moment of EMG

(3) Transmit the code "59" from the Jig RCU once again.
The FDP shows the EMG detail information <2> in the form of " *5 : *6 : *7 ".

*5 : Type of the cassette tape in use <1> .
*6 : Winding position of the cassette tape in use
*7 : Type of the cassette tape in use <2> (Winding area)

(4) Transmit the code "59" from the Jig RCU once again.
The FDP shows the EMG detail information <3> in the form of "*8 : *9 : *10".

*8 : Previous deck operation mode at the moment of EMG
*9 : The deck operation mode of the one before the last at the moment of EMG
*10: The deck operation mode of the one prior to one above at the moment of EMG

(5) Transmit the code "59" from the Jig RCU once again to reset the display.

5.3.2 Clearing the EMG history

(1) Display the EMG history.
(2) Transmit the code “36” from the Jig RCU.
(3) Reset the EMG display.

5.3.3 Details of the OSD display in the EMG display mode

During the EMG display, the OSD shows the data on the deck mode, etc. The details of the display contents are as follows.

Notes:

- **The display is variable depending on the part No. of the System Control microcomputer (IC3001) built into the VCR. In the following, refer to the figure carrying the same two characters as the top two characters of the part number of your IC.**
- **The sensor information in the OSD display contents is partially different from the mechanism sensor information in EMG detail information <1>.**

[For MN* only]

AA	BB	CC	DD	EE
FF	GG	HH	I I	J J
KK	L L	MM	NN	OO
PP	QQ	RR	SS	TT
UU	VV	WW	XX	YY

AA : Deck operation mode (See EMG detail information <1>.)
BB : Mechanism operation mode (See EMG detail of information <1>.)
CC : Mechanism transition flag
DD : Capstan motor control status
EE : Loading motor control status
FF : Sensor information (See sensor information details.)
GG : Capstan motor speed
HH : Key code (JVC code)
I I : Supply reel winding diameter data higher 8 bits.
JJ : Supply reel winding diameter data lower 8 bits.
KK : Mechanism sensor information & mechanism mode position(See EMG detail of information <1>.)
LL : Tape speed data higher 8 bits.
MM : Tape speed data lower 8 bits.
NN : Cassette tape type <2> higher 8 bits. (See EMG detail of information <2>.)
OO : Cassette tape type <2> lower 8 bits. (See EMG detail of information <2>.)
PP : General data display area

YY : General data display area

***FF:Sensor information details**

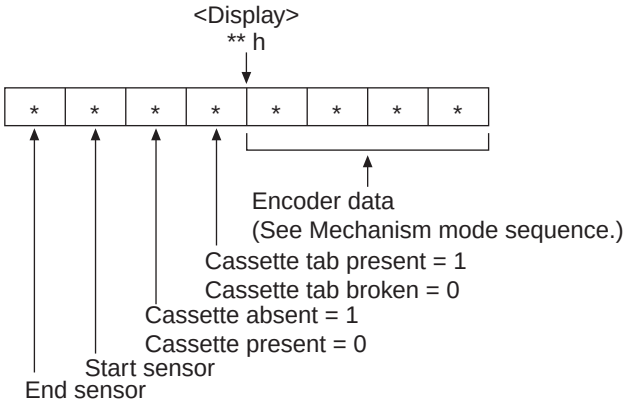

[For *HD only]

AA	BB	CC
DD	EE	FF
GGGG	HHHH	
I I	J J J J	
KKKK	L L L L	MMMM
ROM No.		

AA : Key code (JVC code)
BB : Deck operation mode(See EMG detail information <1>.)
CC : Mechanism operation mode (See EMG detail information <1>.)
DD : Sensor information (See sensor information details.)
EE : Capstan motor speed (Search, double speed)
FF : Tracking value
GGGG : Cassette tape type <2>, 16 bits. (See EMG detail information <2>.)
HHHH : Supply reel winding diameter data
I I : Capstan motor speed (FF/REW, double speed)
JJJJ : Tape speed data, lower 8 bits.
KKKK : General data display area
LLLL : General data display area
MMMM : General data display area

***DD:Sensor information details**

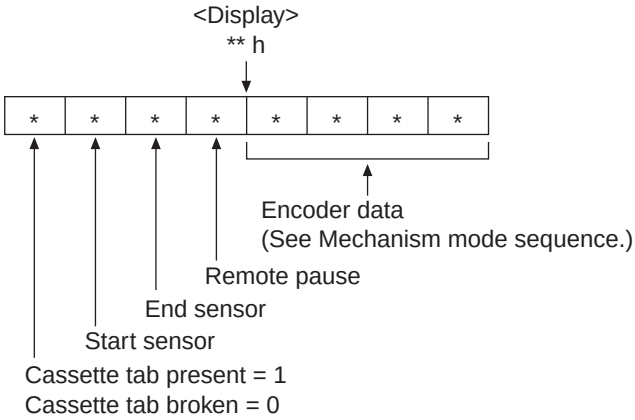

[For both MN*/HD*]

Mechanism mode sequence

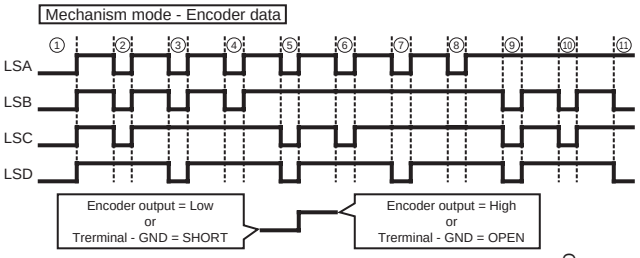

No.	Position	Encoder data
①	EJECT	0 h = 0000
②	EJECT1	1 h = 0001
③	EJECT2	2 h = 0010
④	ULSTOP	3 h = 0011
⑤	UPPER	4 h = 0100
⑥	ONSTOP(PLAY)	5 h = 0101
⑦	FWD/SS	6 h = 0110
⑧	REV/SS	7 h = 0111
⑨	OFFSTOP	8 h = 1000
⑩	FFREW-BRAKE	9 h = 1001
⑪	FFREW	A h = 1010
⑫	MIDDLE	F h = 1111

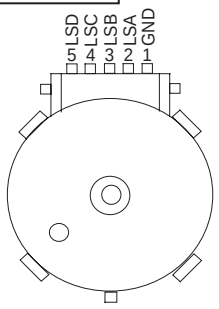

5.3.4 EMG content description

Note:

EMG contents “E08/E09” are for the model with Dynamic Drum (DD).

FDP	CONTENT	CAUSE
E01: Loading EMG	If the mechanism mode does not change to the next mode within 4 seconds after the loading motor starts rotating in the loading direction, while the mechanism is in the after-loading position (with the tape up against the pole base), [E:01] is identified and the power is switched OFF. However, if the tape loading is not completed within 4 seconds after the loading motor starts rotating in the loading direction, the tape is simply unloaded and ejected. No EMG data is recorded in this case.	1. The mechanism is locked in the middle of the mode transition during a tape loading operation. 2. The mechanism overruns during the tape loading operation because the SYSCON cannot recognize the mechanism mode normally. This problem is due to a cause such as a rotary encoder failure. 3. Power is not supplied to the loading MDA. (M12V/Vcc/Vref/ICP are disconnected in the middle.)
E02: Unloading EMG	When the mechanism mode cannot be changed to another mode even when the loading motor has rotated for more than 4 seconds in the unloading direction, [E:02] is identified and the power is turned off.	1. The mechanism is locked in the middle of mode transition. 2. Without an eject signal being sent from the SYSCON, unloading is attempted (i.e. Ejection is attempted while the tape is still inside the mechanism.) because the SYSCON cannot recognize the mechanism mode normally. This is due to a cause such as a rotary encoder failure. (Mechanism position: UPPER) 3. Power is not supplied to the loading MDA. (M12V/Vcc/Vref/ICP are disconnected in the middle.)
E03: Take Up Reel Pulse EMG	When the falling edje of the take-up reel pulse has not been generated for more than 4 seconds in the capstan rotating mode, [E:03] is identified, the pinch rollers are turned off and stopped, and the power is turned off. In this case, however, the mechanism should be in position after tape loading. Note that the reel EMG is not detected during Slow/Frame advance operations.	1. The take-up reel pulse is not generated in the FWD transport modes (PLAY/FWD SEARCH/FF, etc.) because; 1) The idler gear is not meshed with the take-up reel gear because the mechanism mal-functions for some reason. 2) The idler gear is meshed with the take-up reel gear, but incapable of winding due to too large mechanical load (abnormal tension); 3) The reel is rotating normally but an FG pulse is not generated due to the take-up reel sensor failure. 2. The supply reel pulse is not generated in the REV transport modes (REV SEARCH/REW, etc.) because; 1) The idler gear is not meshed with the supply reel gear because the mechanism mal-functions for some reason. 2) The idler gear is meshed with the supply reel gear, but incapable of winding due to too large a mechanical load (abnormal tension); 3) The reel rotates normally but the FG pulse is not generated due to a supply reel sensor failure. 3. Power(SW5V) is not supplied to the reel sensor on the tape winding side.
E04: Drum FG EMG	When the drum FG pulse has not been input for more than 3 seconds in the drum rotating mode, [E:04] is identified, the pinch rollers are turned off and stopped, and the power is turned off.	1. The drum could not start or the drum rotation has stopped due to too large a load on the tape, because; 1) The tape tension is abnormally high; 2) The tape is damaged or a foreign object (grease, etc.) adheres to the tape. 2. The drum FG pulse did not reach the System controller CPU because; 1) The signal circuit is disconnected in the middle; 2) The FG pulse generator (hall device) of the drum is faulty. 3. The drum control voltage (DRUM CTL V) is not supplied to the MDA. 4. Power (M12V) is not supplied to the drum MDA.
E05: Cassette Eject EMG	If the cassette does not reach the eject position within about 0.7 seconds after the cassette housing has started the cassette ejection operation, [E:05] is identified, the drive direction is reversed to load the tape, the mode is switched to STOP mode with the pinch roller OFF, and the power is switched OFF. During the cassette insertion process, the drive direction is reversed and the cassette is ejected if the tape is not up against the pole base within about 3 seconds after the start of the cassette pulling-in operation. If the cassette does not reach the eject position within about 0.7 seconds after the drive mode reversal operation, [E:05] is identified and the power is switched OFF immediately.	1. The cassette cannot be ejected due to a failure in the drive mechanism of the housing. 2. When the housing load increases during ejection, the loading motor is stopped because of lack of headroom in its drive torque. Housing load increasing factors: Temperature environment (low temperature, etc.), mechanism wear or failure. 3. The sensor/switch for detecting the end of ejection are not functioning normally. 4. The loading motor drive voltage is lower than specified or power (M12V) is not supplied to the motor (MDA). 5. When the user attempted to eject a cassette, a foreign object (or perhaps the user's hand) was caught in the opening of the housing.
E06: Capstan FG EMG	When the capstan FG pulse has not been generated for more than 1 second in the capstan rotating mode, [E:06] is identified, the pinch rollers are turned off and stopped, and the power is turned off.However, the capstan EMG is not detected in SLOW/STILL modes. Note that, if the part number of the System Control IC begins with "MN" or "M3", the capstan EMG is not detected even during the FF/REW operation.	1. The capstan could not start or the capstan rotation has stopped due to too large a load on the tape, because; 1) The tape tension is abnormally high (mechanical lock); 2) The tape is damaged or a foreign object (grease, etc.) is adhered to the tape (occurrence of tape entangling, etc.). 2. The capstan FG pulse did not reach the System controller CPU because; 1) The signal circuit is disconnected in the middle; 2) The FG pulse generator (MR device) of the capstans is faulty. 3. The capstan control voltage (CAPSTAN CTL V) is not supplied to the MDA. 4. Power (M12V, SW5V) are not supplied to the capstan MDA.
E07: SW Power Short-Circuit EMG	When short-circuiting of the SW power supply with GND has lasted for 0.5 second or more, [E:07] is identified, all the motors are stopped and the power is turned off.	1. The SW 5 V power supply circuit is shorted with GND. 2. The SW 12 V power supply circuit is shorted with GND.
E08: DD Initialized (Absolute Position Sensor) EMG	When DD tilting does not complete in 4 seconds, [E:08] is identified, the tilt motor is stopped and the power is turned off.	1. The absolute value sensor is defective. (The soldered parts have separated.) 2. The pull-up resistor at the absolute sensor output is defective. (The soldered parts have separated.) 3. Contact failure or soldering failure of the pins of the connector (board-to-board) to the absolute value sensor. 4. The absolute value sensor data is not sent to the System Controller CPU.
E09: DD FG EMG	When the DD FG pulse is not generated within 2.5 seconds, [E:09] is identified, the tilt motor is stopped and the power is turned off.	1. The FG sensor is defective. (The soldered parts have separated.) 2. The pull-up resistor at the FG sensor output is defective. (The soldered parts have separated.) 3. Contact failure or soldering failure of the pins of the connector (board-to-board) to the FG sensor. 4. The power (5V) to the sensor is not supplied. (Connection failure/soldering failure) 5. The FG pulse is not sent to the System Controller CPU. 6. The tilt motor is defective. (The soldered parts have separated.) 7. The drive power to the tilt motor is not supplied. (Connection failure/soldering failure) 8. The tilt motor drive MDA - IC is defective. 9. Auto-recovery of the DD tilting cannot take place due to overrun.
E0A: Supply Reel Pulse EMG	When the falling edge of the supply reel pulse has not been generated for more than 10 seconds in the capstan rotating mode, [E:0A] is identified and the cassette is ejected (but the power is not turned off). In this case, however, the mechanism should be in the position after tape loading (with the tape up against the pole base). Also note that the reel EMG is not detected during Slow/Frame advance operations.	1. The supply reel pulse is not generated in the FWD transport mode (PLAY/FWD SEARCH/FF, etc.) because; 1) PLAY/FWD or SEARCH/FF is started while the tape in the inserted cassette is cut in the middle; 2) A mechanical factor caused tape slack inside and outside the supply reel side of the cassette shell. In this case, the supply reel will not rotate until the tape slack is removed by the FWD transport, so the pulse is not generated until then; 3) The reel is rotating normally but the FG pulse is not generated due to a supply reel sensor failure. 2. The take-up reel pulse is not generated in the REV transport mode (REV SEARCH/REW, etc.). 1) REV SEARCH/REW is started when the tape in the inserted cassette has been cut in the middle; 2) A mechanical factor caused tape slack inside and outside the take-up reel side of the cassette shell. In this case, the take up will not rotate until the tape slack is removed by the REV transport, so the pulse will not be generated until that time; 3) The reel is rotating normally but the FG pulse is not generated due to a take-up reel sensor failure. 3. The power (SW 5V) to a reel sensor is not supplied.
EU1: Head clog warning history	Presupposing the presence of the control pulse output in the PLAY mode, when the value obtained by mixing the two V.FM output channels (without regard to the A.FM output) has remained below a certain threshold level for more than 10 seconds, [E:U1] is identified and recorded in the emergency history. During the period in which the head clog is detected, the FDP shows "U:01" and the OSD repeats the "3 seconds of warning display" and the "7 seconds of noise picture display" alternately. EMG code : "E:C1" or "E:U1" / FDP : "U:01" / OSD : "Try cleaning tape." or "Use cleaning cassette." The head clog warning is reset when the above-mentioned threshold has been exceeded for more than 2 seconds or the mode is changed to another mode than PLAY.	

5.3.5 EMG detail information <1>

The status (electrical operation mode) of the VCR and the status (mechanism operation mode/sensor information) of the mechanism in the latest EMG can be confirmed based on the figure in EMG detail information <1> .

[FDP/OSD display] *1 : *2 : 34

*1 : Deck operation mode at the moment of EMG
*2 : Mechanism operation mode at the moment of EMG
3- : Mechanism sensor information at the moment of EMG
-4 : Mechanism mode position at the moment of EMG

Note:

- **For EMG detailed information <1>, the content of the code that is shown on the display (or OSD) differs depending on the parts number of the system control microprocessor (IC3001) of the VCR. The system control microprocessor parts number starts with two letters, refer these to the corresponding table.**

***1 : Deck operation mode**

[Common table of MN* and HD]

Display		Deck operation mode
MN*	HD*	
00	-	Mechanism being initialized
01	00	STOP with pinch roller pressure off (or tape present with P.OFF)
02	01	STOP with pinch roller pressure on
03	-	POWER OFF as a result of EMG
04	04	PLAY (Normal playback)
0C	0E	REC
10	11	Cassette ejected
20	22	FF
21	-	Tape fully loaded, START sensor ON, short FF
22	-	Cassette identification FWD SEARCH before transition to FF (SPx7-speed)
24	26	FWD SEARCH (variable speed) including x2-speed
2C	2E	INSERT REC
40	43	REW
42	-	Cassette identification REV SEARCH before transition to REW (SPx7-speed)
44	47	REV SEARCH (variable speed)
4C	4C	AUDIO DUB
6C	6E	INSERT REC (VIDEO + AUDIO)
84	84	FWD STILL / SLOW
85	85	REV STILL / SLOW
8C	8F	REC PAUSE
8D	-	Back spacing
8E	-	Forward spacing (FWD transport mode with BEST function)
AC	AF	INSERT REC PAUSE
AD	-	INSERT REC back spacing
CC	CD	AUDIO DUB PAUSE
CD	-	AUDIO DUB back spacing
EC	EF	INSERT REC (VIDEO + AUDIO) PAUSE
ED	-	INSERT REC (VIDEO + AUDIO) back spacing

***2 : Mechanism operation mode**

[Table of MN*]

Display	Mechanism operation mode
00	Command standby (No command to be executed)
01	Immediate Power OFF after EMG occurrence
02	Loading from an intermediate position during mechanism initialization
03	Unloading due to EMG occurrence during mechanism initialization
04	Ejecting cassette (ULSTOP to EJECT)
05	Inserting cassette (EJECT to ULSTOP)
06	Loading tape (ULSTOP to PLAY)
07	Unloading tape (PLAY to ULSTOP)
08	Transition from pinch roller ON to STOP
09	Transition from pinch roller OFF to STOP (PLAY to OFFSTOP)
0A	Transition from pinch roller OFF to STOP at power OFF
0B	Transition from pinch roller ON to STOP at power ON
0C	Transition to PLAY
0D	Transition to Search FF
0E	Transition to REC
0F	Transition to FWD STILL/SLOW
10	Transition to REV STILL/SLOW
11	Transition to Search REV
12	Transition from FF/REW to STOP
13	Transition to FF
14	Transition to REW
15	Tape end detection processing during loading
16	Short FWD/REV at tape sensor ON during unloading
17	Transition to FF/REW brake mode

[Table of HD*]

Display	Mechanism operation mode
00	STOP with pinch roller pressure off
01	STOP with pinch roller pressure on
02	U/L STOP (or tape being loaded)
04	PLAY (Normal playback)
05	PLAY (x1-speed playback using JOG)
0E	REC
11	Cassette ejected
22	FF
26	FWD SEARCH (variable speed) including x2-speed
2E	INSERT REC
43	REW
47	REV SEARCH
4C	AUDIO DUB
6E	INSERT REC (VIDEO + AUDIO)
84	FWD STILL/SLOW
85	REV STILL/SLOW
8F	REC PAUSE
AF	INSERT REC PAUSE
C7	REV SEARCH (x1-speed reverse playback using JOG)
CD	AUDIO DUB PAUSE
EF	INSERT REC (VIDEO + AUDIO) PAUSE
F0	Mechanism being initialized
F1	POWER OFF as a result of EMG
F2	Cassette being inserted
F3	Cassette being ejected
F4	Transition from STOP with pinch roller pressure on to STOP with pinch roller pressure off
F5	Transition from STOP with pinch roller pressure on to PLAY
F6	Transition from STOP with pinch roller pressure on to REC
F7	Cassette type detection SEARCH before FF/REW is being executed
F8	Tape being unloaded
F9	Transition from STOP with pinch roller pressure off to STOP with pinch roller pressure on
FA	Transition from STOP with pinch roller pressure off to FF/REW
FB	Transition from STOP with pinch roller pressure off to REC.P (T.REC,etc.)
FC	Transition from STOP with pinch roller pressure off to cassette type detection SEARCH
FD	Short REV being executed after END sensor on during unloading
FE	Tension loosening being executed after tape loading (STOP with pinch roller pressure on)
FF	Tape being unloaded

3- : Mechanism sensor information

[Common table of MN* and HD*]

Display	Mechanism sensor informatio n			
	REC safety SW	Start sensor	End sensor	Mechansim position sensor
0-	Tab broken	ON	ON	ON
1-	Tab broken	ON	ON	OFF
2-	Tab broken	ON	OFF	ON
3-	Tab broken	ON	OFF	OFF
4-	Tab present	OFF	ON	ON
5-	Tab present	OFF	ON	OFF
6-	Tab present	OFF	OFF	ON
7-	Tab present	OFF	OFF	OFF
8-	Tab broken	ON	ON	ON
9-	Tab broken	ON	ON	OFF
A-	Tab broken	ON	OFF	ON
B-	Tab broken	ON	OFF	OFF
C-	Tab present	OFF	ON	ON
D-	Tab present	OFF	ON	OFF
E-	Tab present	OFF	OFF	ON
F-	Tab present	OFF	OFF	OFF
	Tab broken = 0 Tab present = 1	Sensor ON = 0 sensor OFF = 1	Sensor ON = 0 Sensor OFF = 1	

-4 : Mechanism mode position

[Common table of MN* and HD*]

Mechanism sensor information	Dis-play	Deck operation mode	
Even number (0, 2, 4, 6, 8, A, C, E)	-0	Not established	
	-1	EJECT	EJECT position
	-2	EJECT-EJECT1	Intermodal position
	-3	EJECT1	EJECT1 position
	-4	EJECT1-EJECT2	Intermodal position
	-5	EJECT2	EJECT2 position
	-6	EJECT2-ULSTOP	Intermodal position
	-7	ULSTOP	ULSTOP position
	-8	ULSTOP-UPPER	Intermodal position
	-9	UPPER	Loading (unloading) tape
	-A	UPPER-ONSTOP	Intermodal position
	-B	ONSTOP	PLAY position
	-C	PLAY-FWD/SS	Intermodal position
	-D	FWD/SS	FWD (FWD Still/Slow) position
	-E	FWD/SS-REV	Intermodal position
	-F	REV	REV (REV Still/Slow) position
Odd number (1, 3, 5, 7, 9, B, D, F)	-0	REV-OFFSTOP	Intermodal position
	-1	OFFSTOP	Pinch roller OFF position
	-2	OFFSTOP-FFREWB	Intermodal position
	-3	FFREWB	FF/REW Brake position
	-4	FFREWB-FFREW	Intermodal position
	-5	FFREW	FF/REW position

5.3.6 EMG detail information <2>

The type of the cassette tape and the cassette tape winding position can be confirmed based on the figure in EMG detail information <2> .

Note:

- **EMG detail information <2> is the reference information stored using the remaining tape detection function of the cassette tape. As a result, it may not identify cassette correctly when a special cassette tape is used or when the tape has variable thickness.**

*5 : Cassette tape type <1>

Display	Cassette tape type <1>
00	Cassette type not identified
16	Large reel/small reel (T-0 to T-15/T-130 to T-210) not classified
82	Small reel, thick tape (T-120) identified/thin tape (T-140) identified
84	Large reel (T-0 to T-60) identified
92	Small reel, thick tape (T-130) identified/thin tape (T-160 to T-210) identified
93	Small reel, thick tape/C cassette (T-0 to T-100/C cassette) not classified
C3	Small reel, thick tape/C cassette (T-0 to T-100/C cassette) being classified
D3	Small reel, thick tape/C cassette (T-0 to T-100/C cassette) being classified
E1	C cassette, thick tape (TC-10 to TC-20) identified
E2	Small reel, thick tape (T-0 to T-100) identified
E9	C cassette, thin tape (TC-30 to TC-40) identified
F1	C cassette, thick tape/thin tape (TC-10 to TC-40) not classified

Notes:

- **Cassette tape type <1> is identified a few times during mode transition and the identification count is variable depending on the cassette tape type. If an EMG occurs in the middle of identification, the cassette tape type may not be able to be identified.**
- **If other value than those listed in the above table is displayed, the cassette tape type is not identified.**

*6 : Cassette tape winding position

The cassette tape winding position at the moment of EMG is displayed by dividing the entire tape (from the beginning to the end) in 21 sections using a hex number from “00” to “14”.

00 : End of winding
14 : Beginning of winding
FF : Tape position not identified

*7 : Cassette tape type <2> (Winding area)

Display	Cassette tape type <2>		(Reference) Word data (Beginning) (End)
00	Cassette type not identified		
04 - 08	C cassette, thick tape	TC-10	(0497 - 0506) (0732 - 0858)
05 - 06	Small reel, thick tape	T-20	(05A9 - 0661)
05 - 0C	C cassette, thick tape	TC-20P	(0599 - 05FF) (0AA1 - 0C07)
06 - 0C	C cassette, thin tape	TC-40	(0623 - 063D) (0C41 - 0CC3)
06 - 0C	C cassette, thin tape	TC-30	(0611 - 0638) (0C0C - 0CB2)
07 - 08	Small reel, thick tape	T-40	(07CC - 08E5)
09 - 0B	Small reel, thick tape	T-60	(09FD - 0B78)
0C - 0D	Small reel, thick tape	T-80(DF-160)	(0C20 - 0DFC)
0D - 0F	Small reel, thick tape	T-90(DF-180)	(0D31 - 0F3E)
0E - 10	Small reel, thick tape	T-100	(0E43 - 107F)
10 - 12	Small reel, thin tape	T-140	(10E1 - 120C)
10 - 13	Small reel, thick tape	T-120(DF-240)	(1073 - 1313)
11 - 14	Small reel, thick tape	T-130	(1185 - 1429)
12 - 14	Small reel, thin tape	T-160	(12D3 - 141F)
13 - 14	Small reel, thin tape	T-210(DF-420)	(1373 - 14C3)
13 - 14	Small reel, thin tape	T-180(DF-360)	(1357 - 14C0)
13 - 14	Small reel, thin tape	T-168	(1395 - 14EE)
13 - 14	Small reel, thick tape	DF-300	(13A8 - 14CE)
15 - 16	Large reel	T-20	(1536 - 1618)
16 - 17	Large reel	T-30	(1647 - 175A)
17 - 18	Large reel	T-40	(1759 - 189C)
19 - 1B	Large reel	T-60	(1989 - 1B2F)

Note:

- **The values of cassette tape type <2> in the above table are typical values with representative cassette tapes.**

5.3.7 EMG detail information <3>

Three deck operation modes preceding the deck operation mode in which the EMG occurs may be confirmed based on the figures in the EMG information detail <3>. For the contents of the displayed information, see the table "Deck operation mode" in section "5.3.5 EMG detail information <1>".

5.4 Troubleshooting (DVD SECTION)

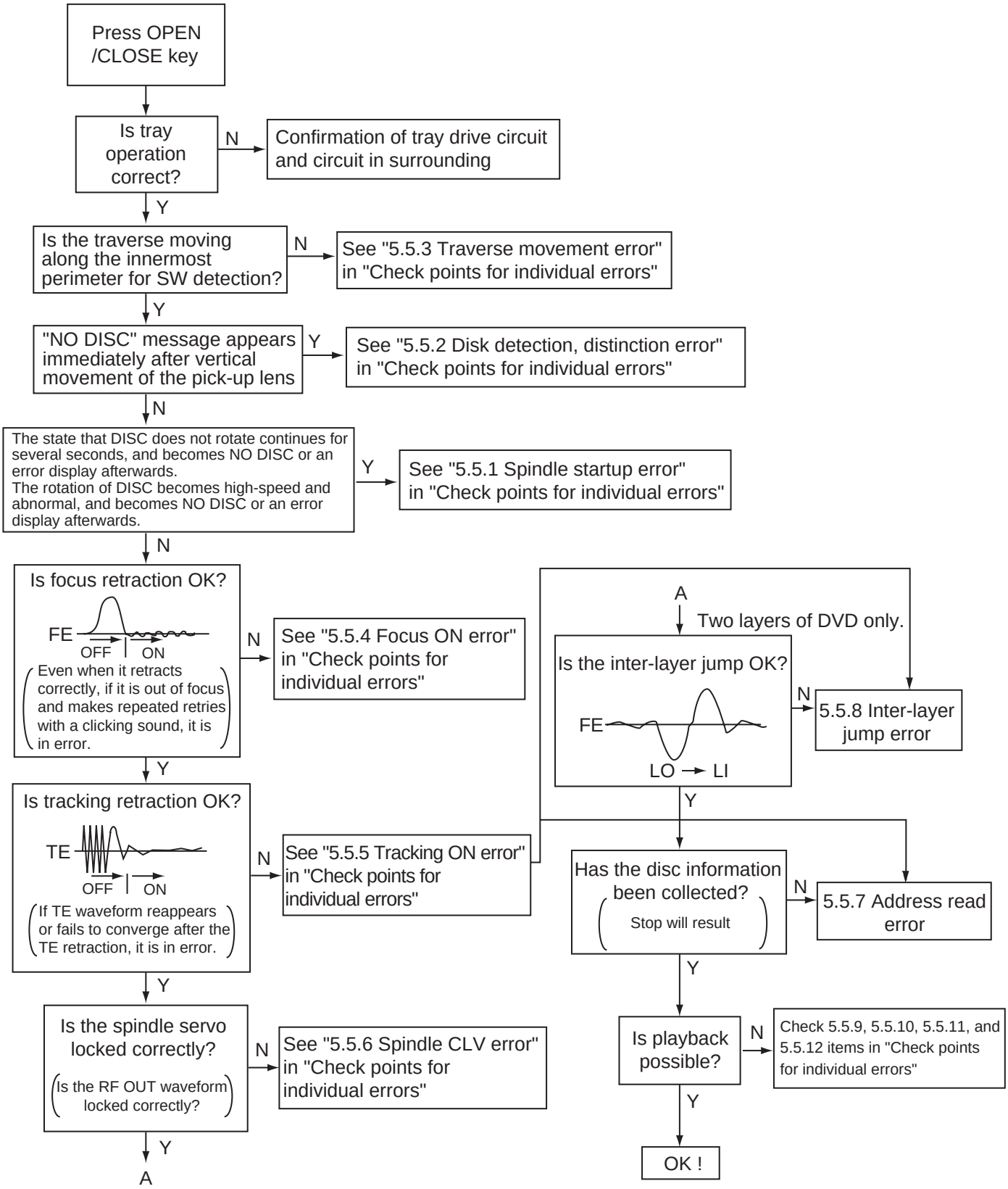

Fig.5-4a

5.5 Check points for each error (DVD SECTION)

5.5.1 Spindle start error

(1) Defective spindle motor

- Are there several ohms resistance between each pin of CN201 "1-2","2-3","1-3"?
  (The power supply is turned off and measured.)
- Is the sign wave of about 100mVp-p in the voltage had from each terminal?
  [CN201"10"(H1+),"11"(H1-),"7"(H2+),"8"(H2-),"5"(H3+),"6"(H3-)]

(2) Defective spindle motor driver (IC251)

- Has motor drive voltage of a sine wave or a rectangular wave gone out to each terminal(SM1~3) of CN201"1,2,3" and IC251"2,4,7"?
- Is FG pulse output from the terminal of IC251"24"(FG) according to the rotation of the motor?
- Is it "L(about 0.9V)" while terminal of IC251"15"(VH) is rotating the motor?

(3) Has the control signal come from servo IC or the microcomputer?

- Is it "L" while the terminal of IC251"18"(SBRK) is operating?
  Is it "H" while the terminal of IC251"23"(/SPMUTE) is operating?
- Is the control signal input to the terminal of IC251"22"(EC)?
  (changes from VHALF voltage while the motor is working.)
- Is the VHALF voltage input to the terminal of IC251"21"(ECR)?

(4) Is the FG signal input to the servo IC?

- Is FG pulse input to the terminal of IC301"69"(FG) according to the rotation of the motor?

5.5.2 Disc Detection, Distinction error (no disc, no RFENV)

- Laser is defective.
- Front End Processor is defective (IC101).
- APC circuit is defective. --- Q101,Q102.
- Pattern is defective. --- Lines for CN101 - All patterns which relate to pick-up and patterns between IC101
- IC101 --- For signal from IC101 to IC301, is signal output from IC101 "20" (ASOUT) and IC101 "41"(RFENV) and IC101 "22" (FEOUT)?

5.5.3 Traverse movement NG

(1) Defective traverse driver

- Has the voltage come between terminal of CN101 "2" and "4" ?

(2) Defective BTL driver (IC201)

- Has the motor drive voltage gone out to IC201"17" or "18"?

(3) Has the control signal come from servo IC or the microcomputer?

- Is it "H" while the terminal of IC201"9"(STBY1) ?
- TRSDRV Is the signal input? (IC301 "67")

(4) TRVSW is the signal input from microcomputer? (IC301 "56")

5.5.4 Focus ON NG

- Is FE output ? --- Pattern, IC101
- Is FODRV signal sent ? (R209) --- Pattern, IC301 "115"
- Is driving voltage sent ? IC201 "13", "14" --- If NG, pattern, driver, mechanical unit .
- Mechanical unit is defective.

5.5.5 Tracking ON NG

- When the tracking loop cannot be drawn in, TE shape of waves does not settle.
- Mechanical unit is defective.
  Because the self adjustment cannot be normally adjusted, the thing which cannot be normally drawn in is thought.
- Periphery of driver (IC201)
  Constant or IC it self is defective.
- Servo IC (IC301)
  When improperly adjusted due to defective IC.

5.5.6 Spindle CLV NG

- IC101 -- "30"(ARF-), "31(ARF+).
- Does not the input or the output of driver's spindle signal do the grip?
- Has the tracking been turned on?
- Spindle motor and driver is defective.
- Additionally, "IC101 and IC301" and "Mechanism is defective(jitter)", etc. are thought.

5.5.7 Address read NG

- Besides, the undermentioned cause is thought though specific of the cause is difficult because various factors are thought.
  Mechanism is defective. (jitter)
  IC301
  The disc is dirty or the wound has adhered.

5.5.8 Between layers jump NG (double-layer disc only)

Mechanism defective
Defect of driver's IC(IC201)
Defect of servo control IC(IC301)

5.5.9 Neither picture nor sound is output

(1) It is not possible search

- Has the tracking been turned on?
- To " Tracking ON NG" in "Check points for each error" when the tracking is not normal.
- Is the feed operation normal?
  To " traverse movement NG" in "Check points for each error" when it is not normal.Are not there caught of the feeding mechanism etc?

5.5.10 Picture is distorted or abnormal sound occurs at intervals of several seconds.

Is the feed operation normal?
Are not there caught of the feeding mechanism etc?

5.5.11 Others

- The image is sometimes blocked, and the image stops.
- The image is blocked when going to outer though it is normal in suroundings in the disk and the stopping sympton increases.

  There is a possibility with bad jitter value for such a symptom.

5.5.12 CD During normal playback operation

(1) Is TOC reading normal?

- Displays total time for CD-DA.
- Shifts to double-speed mode for V-CD

(2) Is playback afterwards possible?

(3) When can not do a normal playback

- --:-- is displayed during FL search.
  According to [It is not possible to search] for DVD, check the feed and tracking systems.
- No sound is output although the time is displayed.(CA-DA)
  DAC, etc, other than servo.
- The passage of time is not stable, or picture is abnormal.(V-CD)
- The wound of the disc and dirt are confirmed.

■ BOARD INTERCONNECTIONS

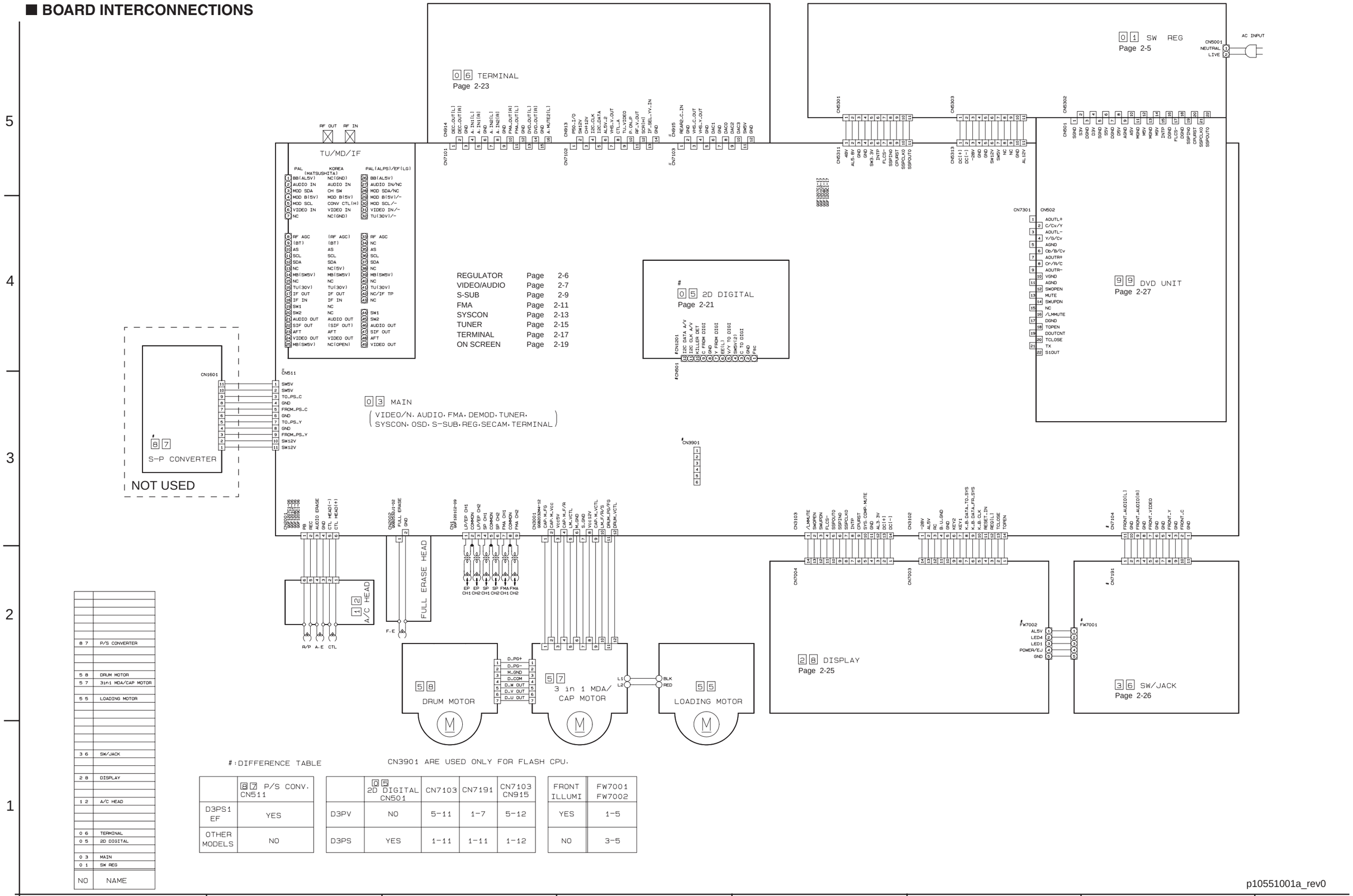

NO	NAME
8 7	P/S CONVERTER
5 8	DRUM MOTOR
5 7	3in1 MDA/CAP MOTOR
5 5	LOADING MOTOR
3 6	SW/JACK
2 8	DISPLAY
1 2	A/C HEAD
0 6	TERMINAL
0 5	2D DIGITAL
0 3	MAIN
0 1	SW REG

#:DIFFERENCE TABLE

CN3901 ARE USED ONLY FOR FLASH CPU.

	8 7 P/S CONV. CN511
D3PS1 EF	YES
OTHER MODELS	NO

	0 5 2D DIGITAL CN501	CN7103	CN7191	CN7103 CN915
D3PV	NO	5-11	1-7	5-12
D3PS	YES	1-11	1-11	1-12

FRONT ILLUMI	FW7001 FW7002
YES	1-5
NO	3-5

p10551001a_rev0

■ SWITCHING REGULATOR AND MAIN(REGULATOR) SCHEMATIC DIAGRAMS

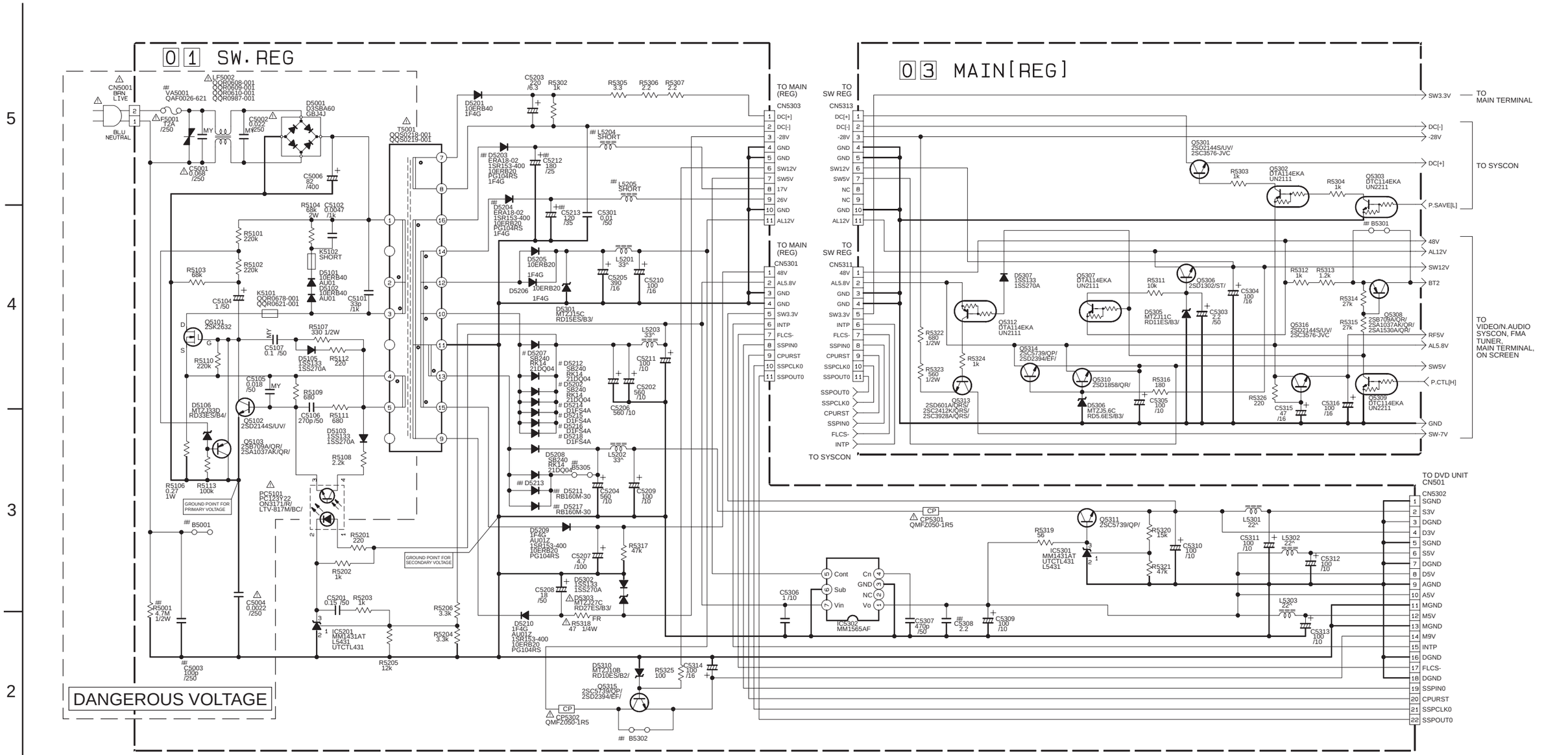

MARK ELEMENTS ARE NOT MOUNTED

DIFFERENCE TABLE 1

	D5202	D5207	D5212	D5214	D5215	D5216	D5218	Q5310	Q5314
SVHS	NO	NO	NO	YES	YES	YES	NO	NO	YES
HIFI	NO	NO	NO	NO	YES	YES	NO	NO	YES

NOTES:UNLESS OTHERWISE SPECIFIED.
ALL RESISTANCE VALUES ARE IN OHMS.
ALL INDUCTANCE VALUES ARE IN H.
ALL CAPACITANCE VALUES ARE IN μF.

ELECTROLYTIC
CERAMIC
MYLER
NON POLAR

p20356001a_rev0

■ MAIN(VIDEO/N.AUDIO) SCHEMATIC DIAGRAM

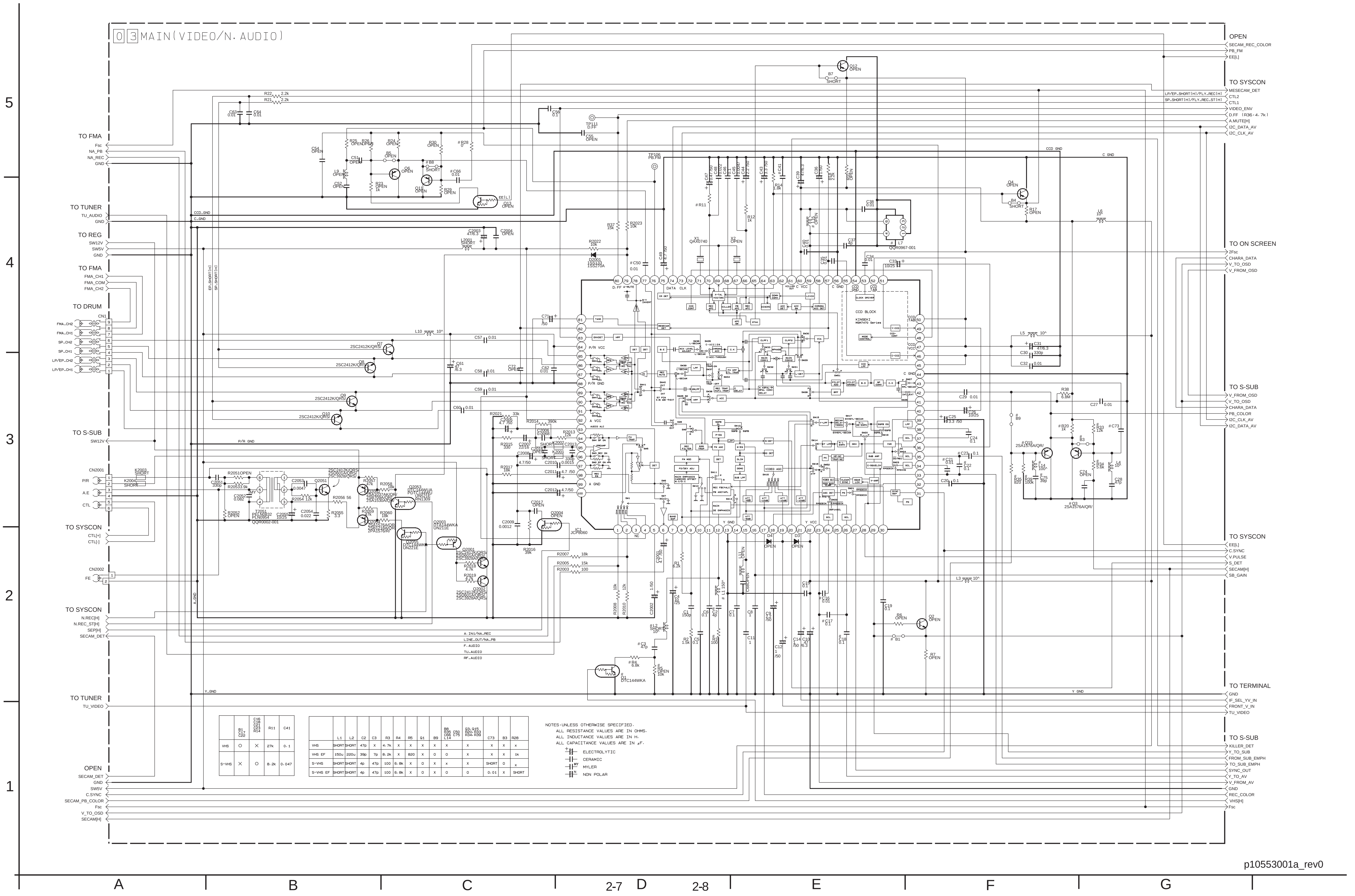

	B1 C17 C22	C16 C18 C21 C23 R14	R11	C41
VHS	O	X	27k	0.1
S-VHS	X	O	8.2k	0.047

	L1	L2	C2	C3	R3	R4	R5	Q1	B9	B8 R35 C50 C66 C75 L14	Q3, Q15 R20, R33 R34, R39	C73	B3	R28
VHS	SHORT	SHORT	47p	X	4.7k	X	X	X	X	X	X	X	X	x
VHS EF	150u	220u	39p	7p	8.2k	X	820	X	O	O	X	X	X	1k
S-VHS	SHORT	SHORT	4p	47p	100	6.8k	X	O	X	x	X	SHORT	O	x
S-VHS EF	SHORT	SHORT	4p	47p	100	6.8k	X	O	X	O	O	0.01	X	SHORT

NOTES: UNLESS OTHERWISE SPECIFIED.
ALL RESISTANCE VALUES ARE IN OHMS.
ALL INDUCTANCE VALUES ARE IN H.
ALL CAPACITANCE VALUES ARE IN μF.

- ELECTROLYTIC
- CERAMIC
- MYLER
- NON POLAR

p10553001a_rev0

■ MAIN(S-SUB) SCHEMATIC DIAGRAMS [HR-XVS30EK, HR-XVS30EX]

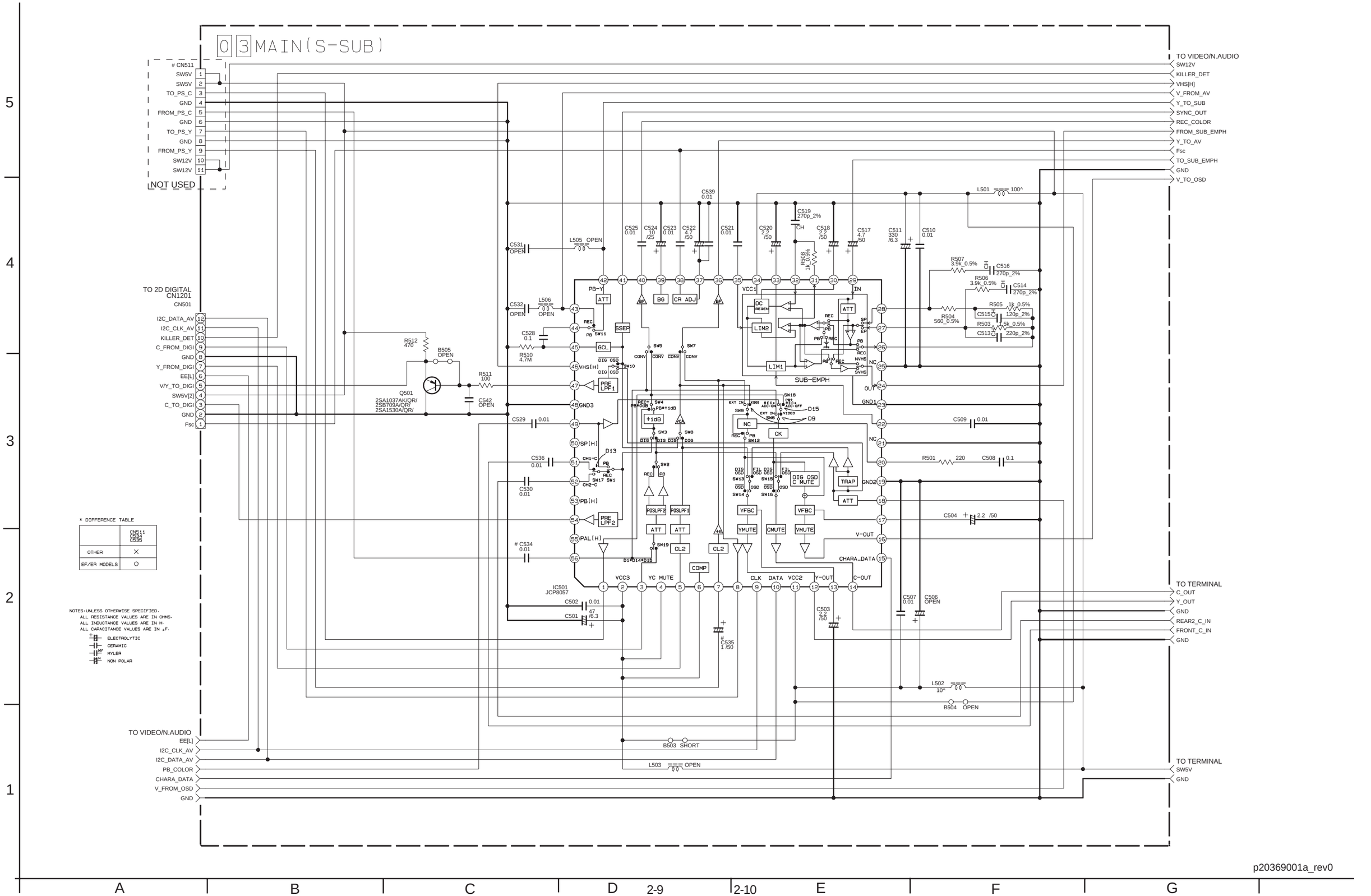

■ MAIN(FMA) SCHEMATIC DIAGRAM

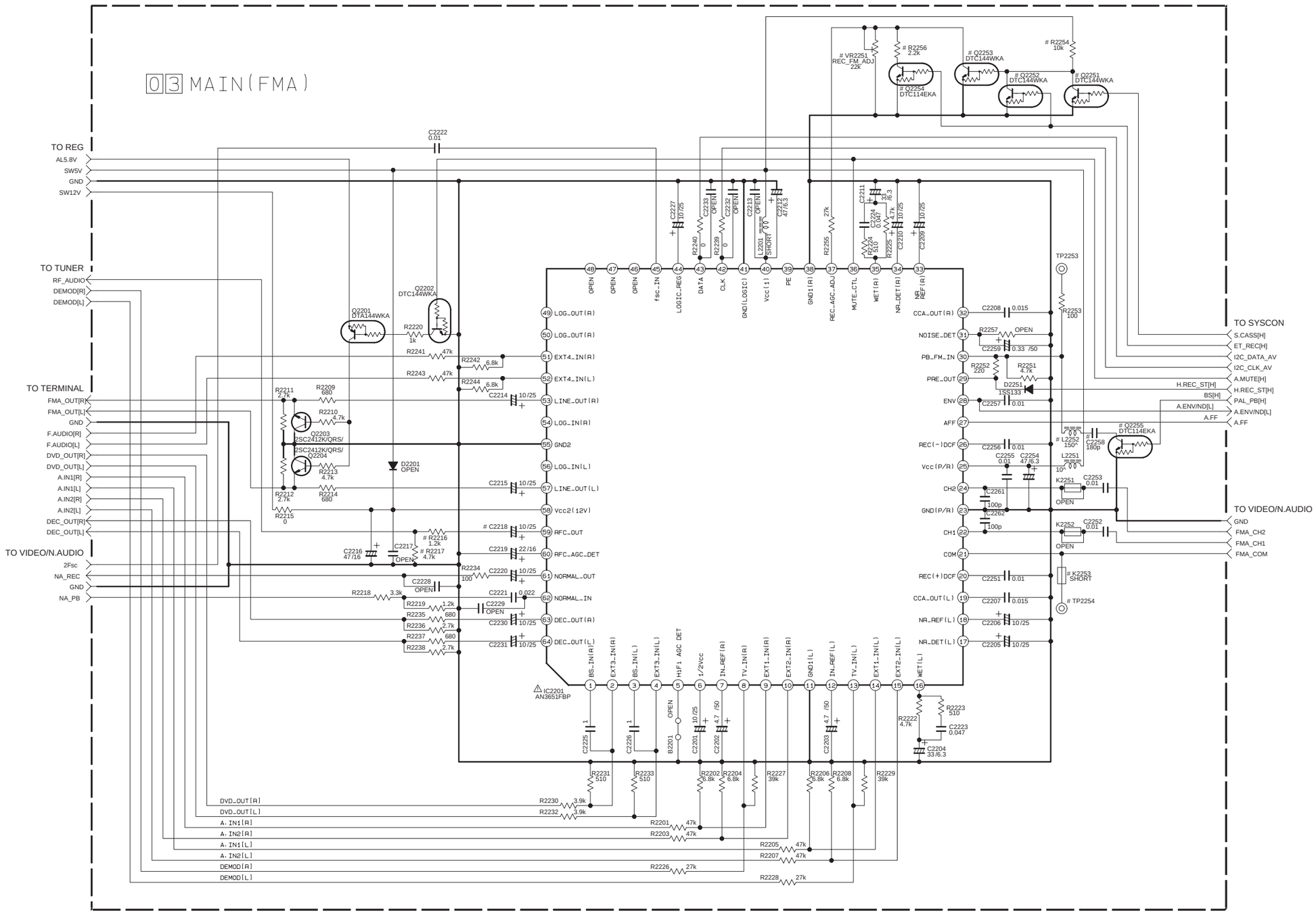

#DIFFERENCE TABLE

RF-IN	Q2251・Q2254・TP2254・K2253
AM	R2254・R2256・VR2251
SVHS	○
VHS	×

	Q2255・C2258・L2252
YES	○
NO	×

	R2216・R2217・C2218
YES	○
NO	×

NOTES:UNLESS OTHERWISE SPECIFIED.
ALL RESISTANCE VALUES ARE IN OHMS.
ALL INDUCTANCE VALUES ARE IN H.
ALL CAPACITANCE VALUES ARE IN μF.

ELECTROLYTIC
CERAMIC
MYLER
NON POLAR

LAST NO		VACANT NO
R	2257	2221・2245-2250
C	2262	2234-2250・2260
D	2251	2202-2250
Q	2255	2205-2250
L	2252	2202-2250
IC	2201	
K	2253	2201-2250
VR	2251	2201-2250

p20368001a_rev0

■ MAIN(SYSCON) SCHEMATIC DIAGRAM

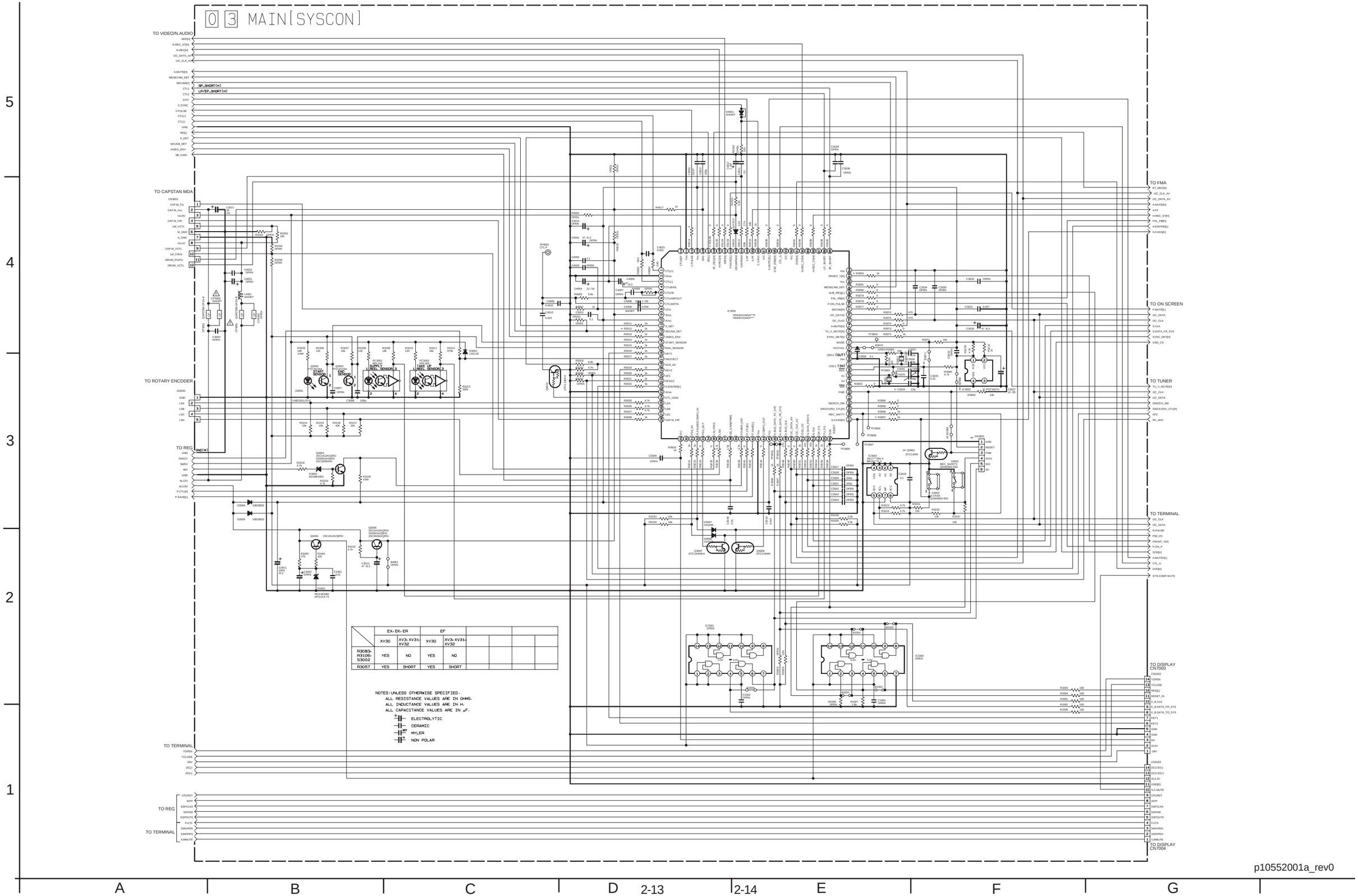

■ MAIN(TUNER) SCHEMATIC DIAGRAM

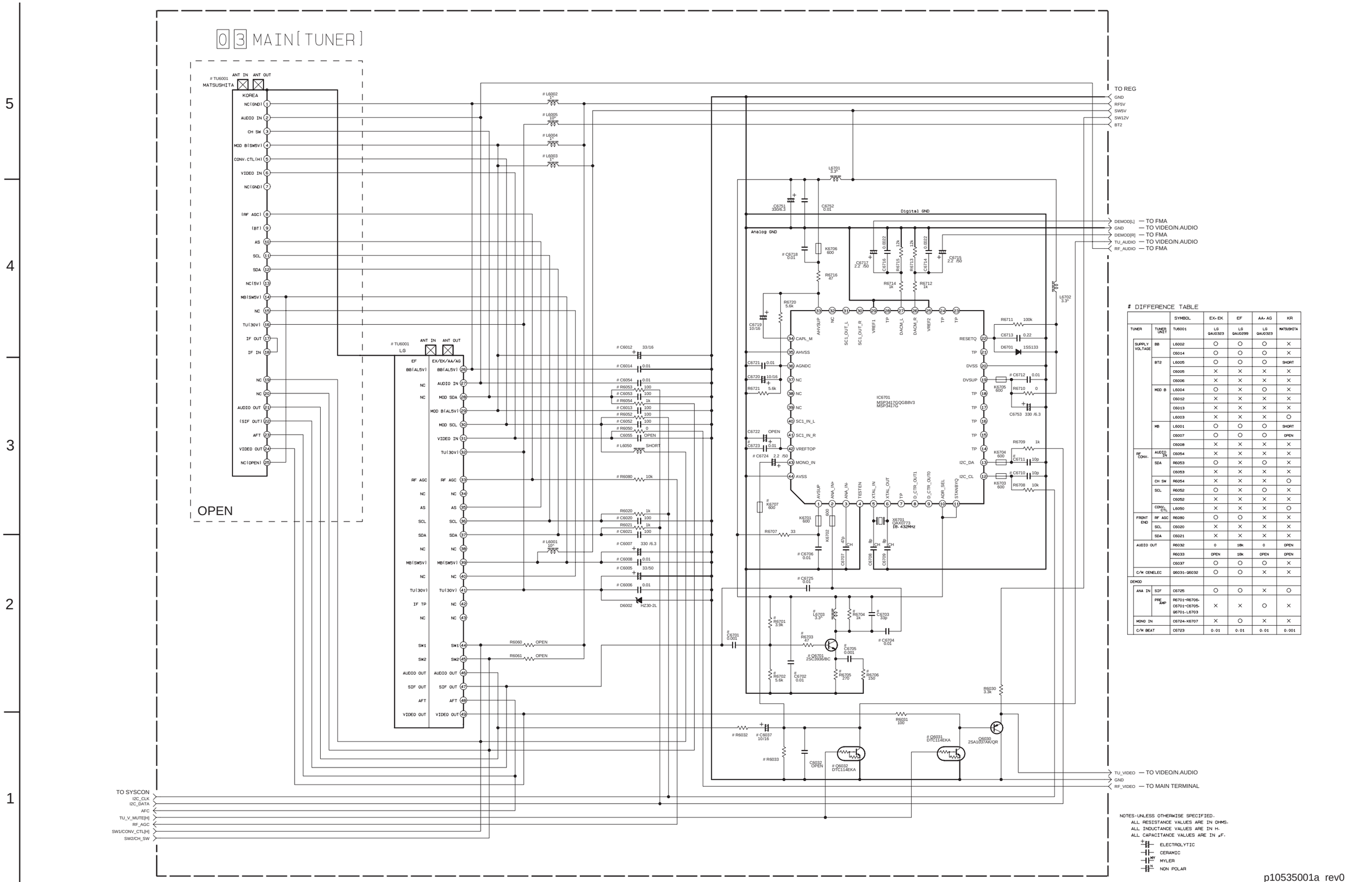

DIFFERENCE TABLE

		SYMBOL	EX, EK	EF	AA, AG	KR
TUNER	TUNER UNIT	TU6001	LG GAU0323	LG GAU0299	LG GAU0323	MATSUSHITA
SUPPLY VOLTAGE	BB	L6002	○	○	○	×
		C6014	○	○	○	×
	BT2	L6005	○	○	○	SHORT
		C6005	×	×	×	×
		C6006	×	×	×	×
	MOD B	L6004	○	×	○	×
		C6012	×	×	×	×
		C6013	×	×	×	×
		L6003	×	×	×	○
	MB	L6001	○	○	○	SHORT
		C6007	○	○	○	OPEN
		C6008	×	×	×	×
RF CONV.	AUDIO IN	C6054	×	×	×	×
	SDA	R6053	○	×	○	×
		C6053	×	×	×	×
	CH SW	R6054	×	×	×	○
	SCL	R6052	○	×	○	×
		C6052	×	×	×	×
	CONV. CTL	L6050	×	×	×	○
FRONT END	RF AGC	R6080	○	○	×	×
	SCL	C6020	×	×	×	×
	SDA	C6021	×	×	×	×
AUDIO OUT		R6032	0	18k	0	OPEN
		R6033	OPEN	18k	OPEN	OPEN
		C6037	○	○	○	×
C/W CENELEC		Q6031, Q6032	○	○	×	×
DEMOD						
ANA IN	SIF	C6725	○	○	×	○
	PRE AMP	R6701-R6706-C6701-C6705-Q6701-L6703	×	×	○	×
MONO IN		C6724-K6707	×	○	×	×
C/W BEAT		C6723	0.01	0.01	0.01	0.001

■ MAIN(TERMINAL) SCHEMATIC DIAGRAM

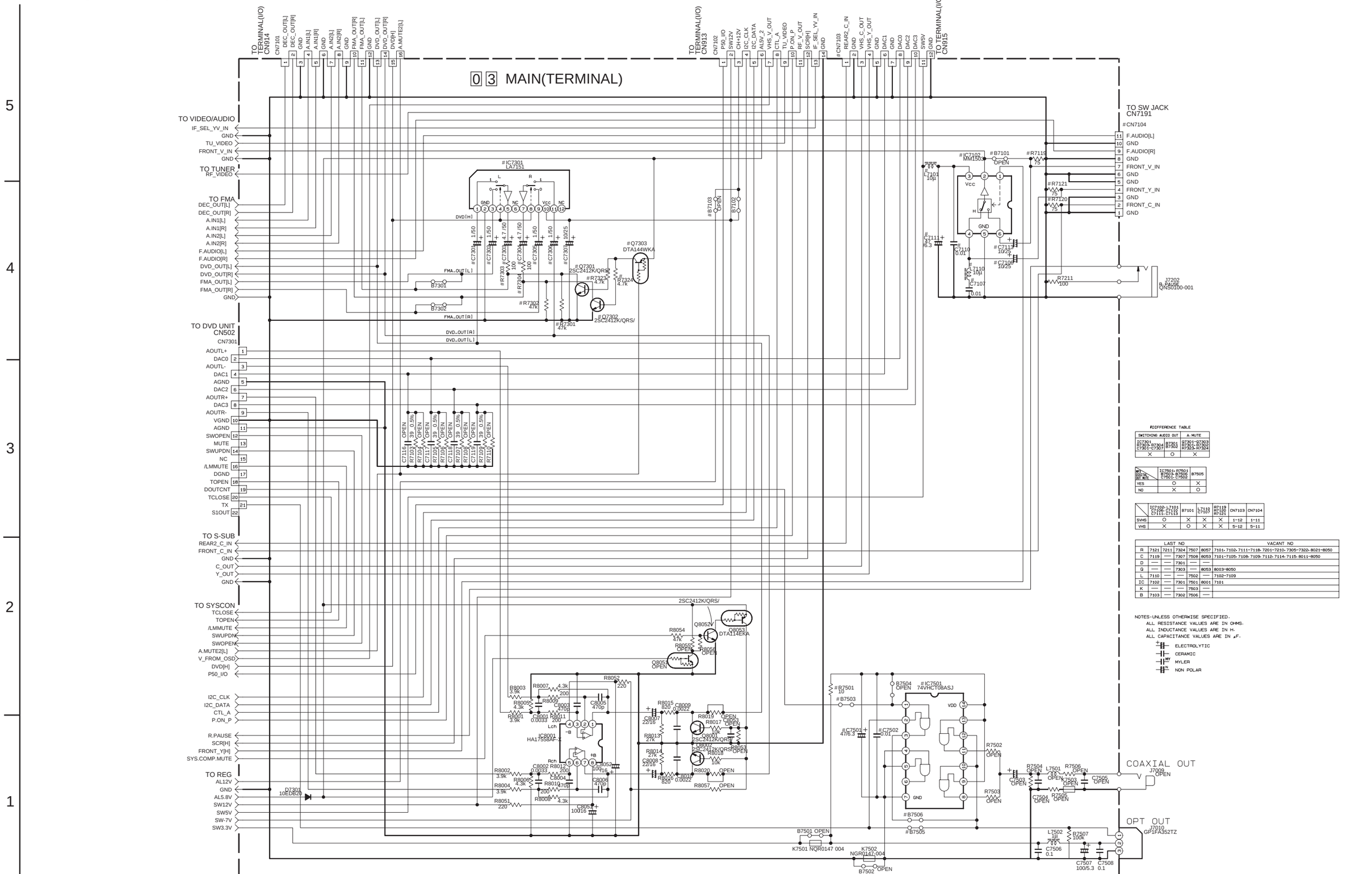

■ MAIN(ON SCREEN) SCHEMATIC DIAGRAM

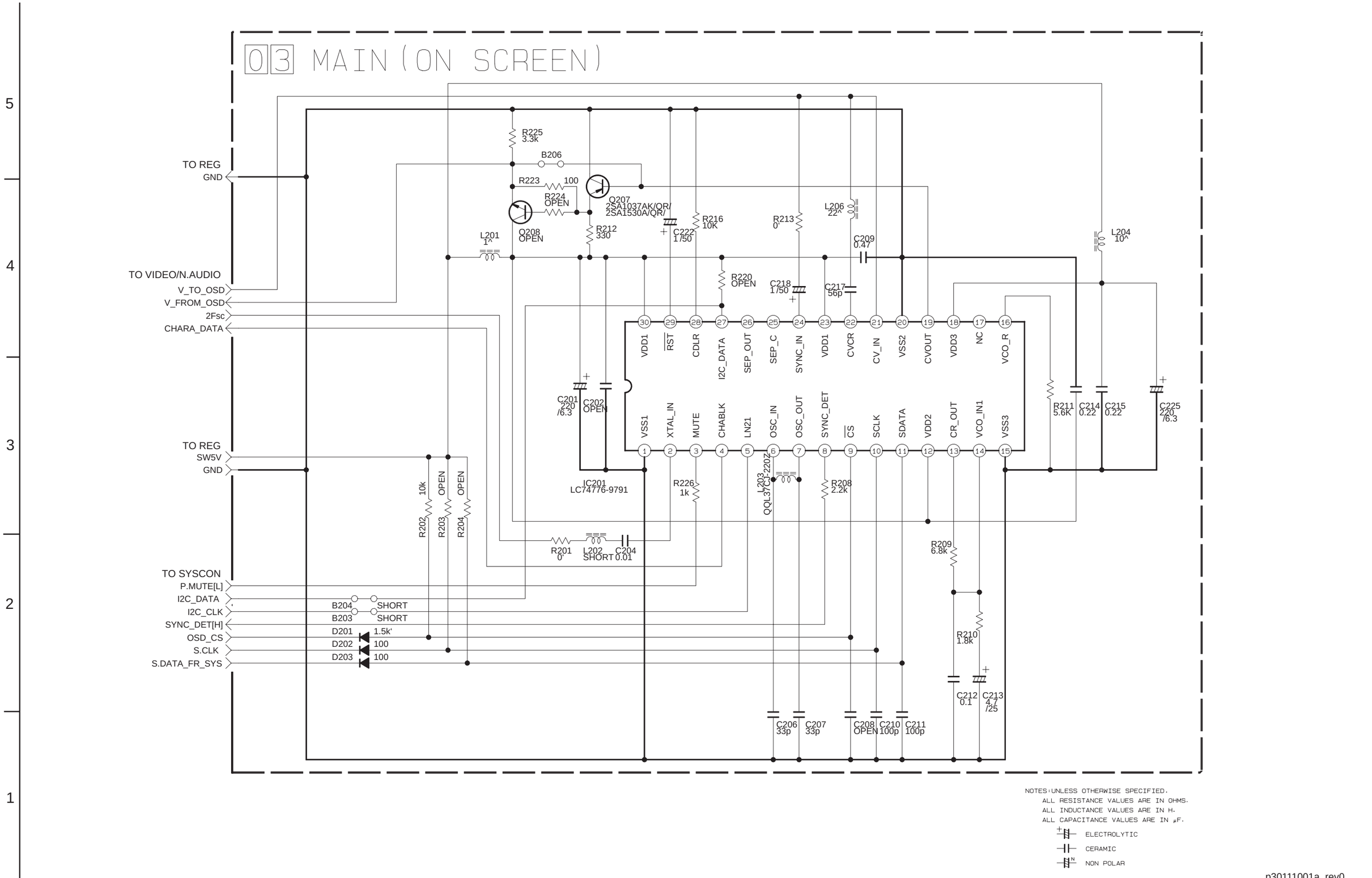

■ 2D DIGITAL SCHEMATIC DIAGRAMS [HR-XVS30EK, HR-XVS30EX]

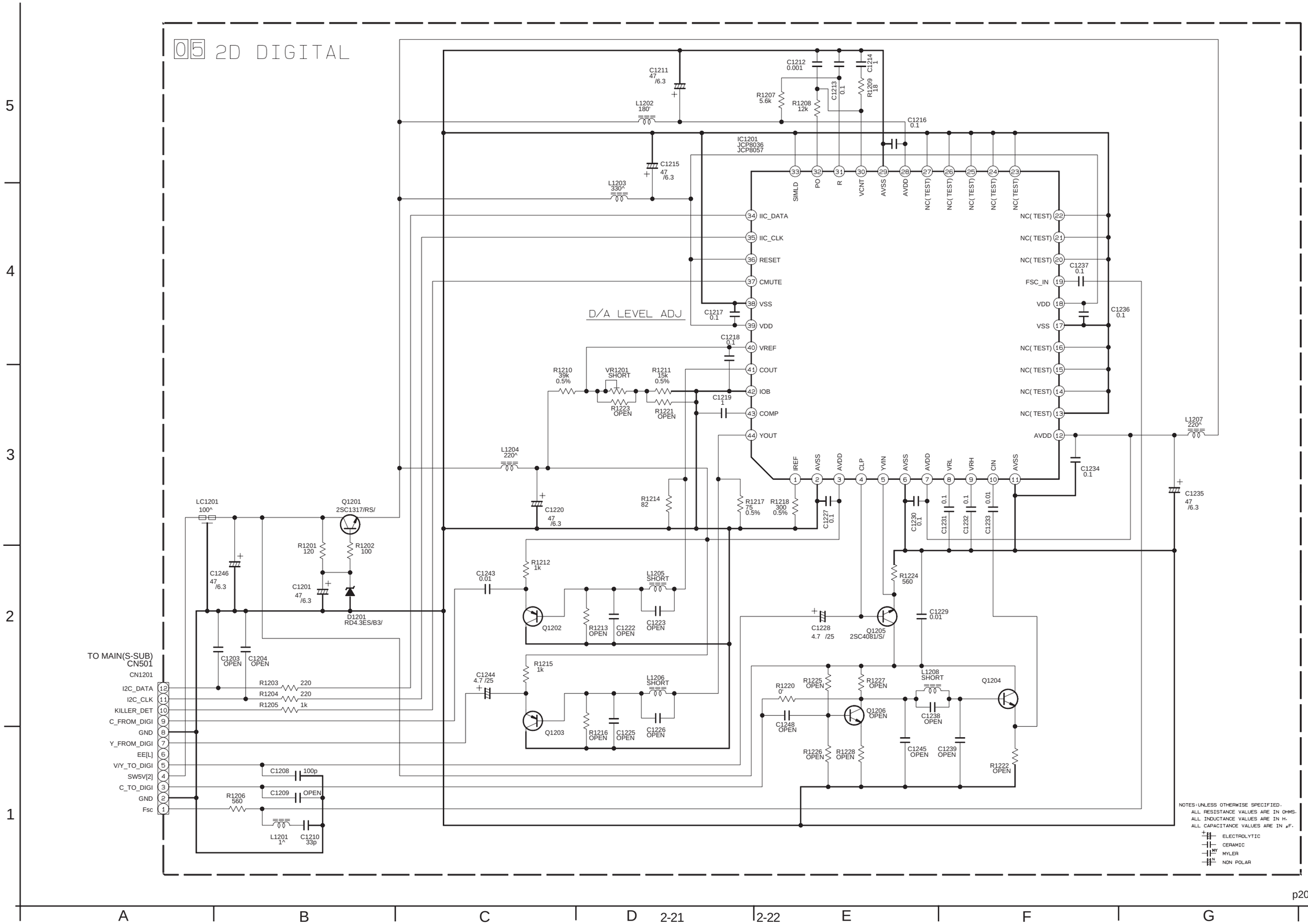

p20370001a_rev0

■ TERMINAL(I/O) SCHEMATIC DIAGRAM

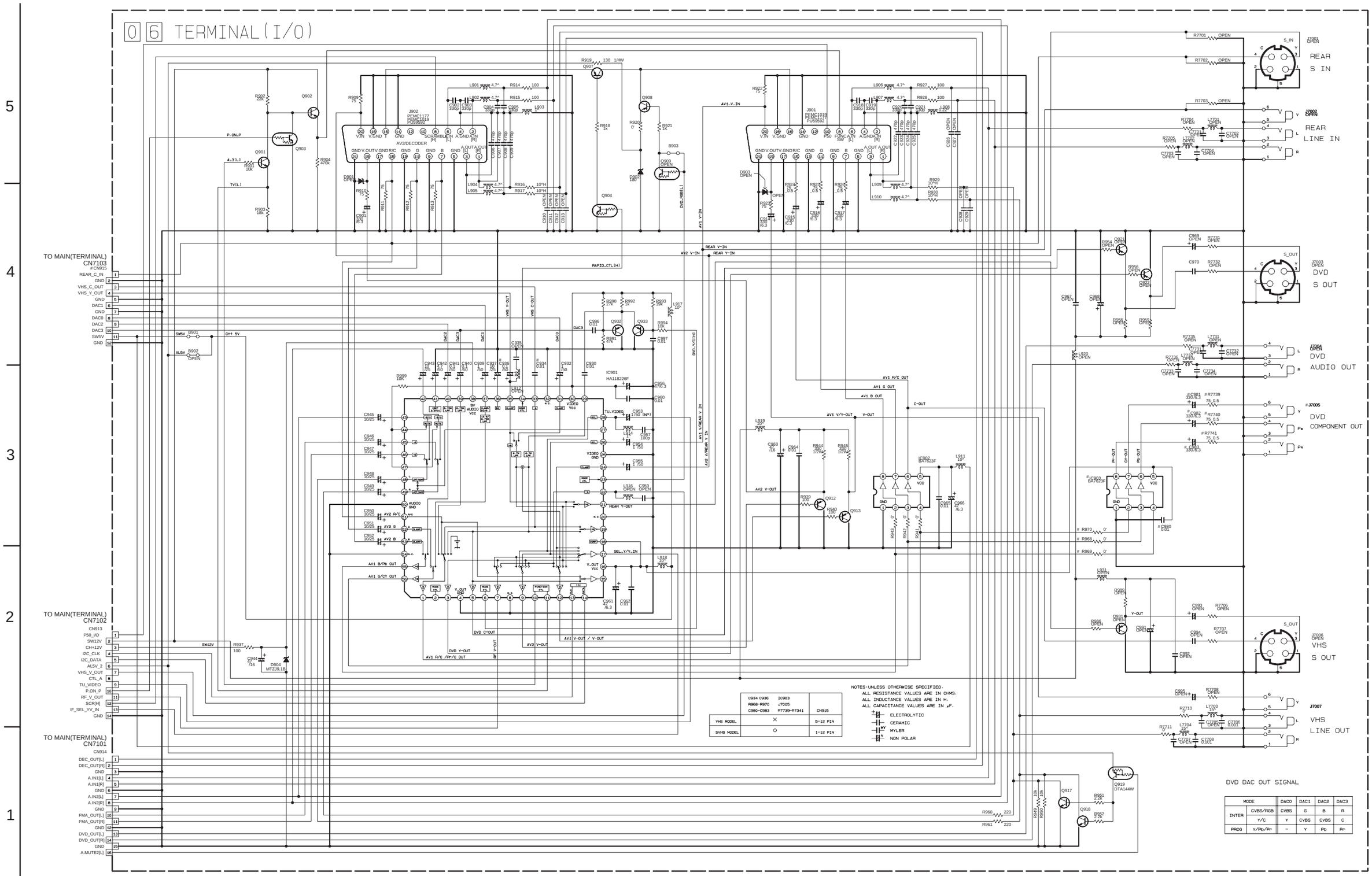

	C934 C936 C960~C963 R968~R970	IC903 J7005 R7739~R7741	CN915
VHS MODEL	×		5-12 PIN
SVHS MODEL	○		1-12 PIN

MODE		DAC0	DAC1	DAC2	DAC3
INTER	CVBS/RGB	CVBS	G	B	R
	Y/C	Y	CVBS	CVBS	C
PROG	Y/Pb/Pr	–	Y	Pb	Pr

■ DISPLAY AND SW JACK SCHEMATIC DIAGRAMS

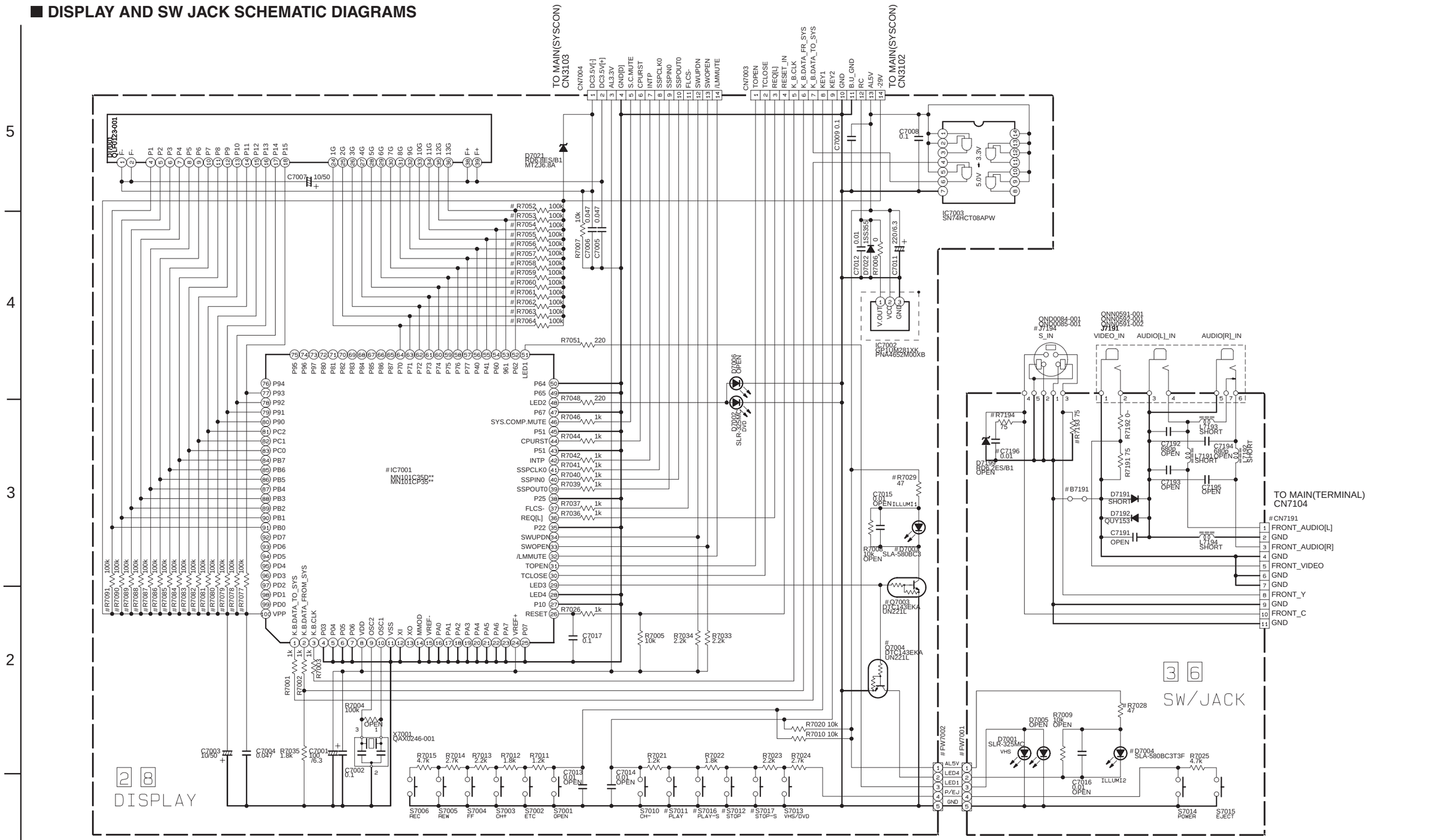

DIFFERENCE TABLE

FRONT	S7011 S7012	S7016 S7017
BASIC	YES	NO
STEP-UP	NO	YES

ILLUMI LED	D7003 D7004	Q7003·Q7004 R7028·R7029	FW7001 FW7002
BLU	SLA-580BDT	YES	1-5
GRN	SLA-580ECT	YES	1-5
BLU-GRN	SLA-570TCT	YES	1-5
NO	NO	NO	3-5

	J7194·B7191 R7193·R7194	CN7191	C7196
Hi-Fi	NO	1-7	NO
JPN S-VHS	YES	1-11	0.01
OTHER	YES	1-11	SHORT

IC7001	R7052-R7064 R7077-R7091
MN101C35D**	NO
MN101CP35**	YES

NOTES:UNLESS OTHERWISE SPECIFIED.
ALL RESISTANCE VALUES ARE IN OHMS.
ALL INDUCTANCE VALUES ARE IN H.
ALL CAPACITANCE VALUES ARE IN μF.

ELECTROLYTIC
CERAMIC
MYLER
NON POLAR

p20338001a_rev0

■ DVD SERVO CONTROL SCHEMATIC DIAGRAM

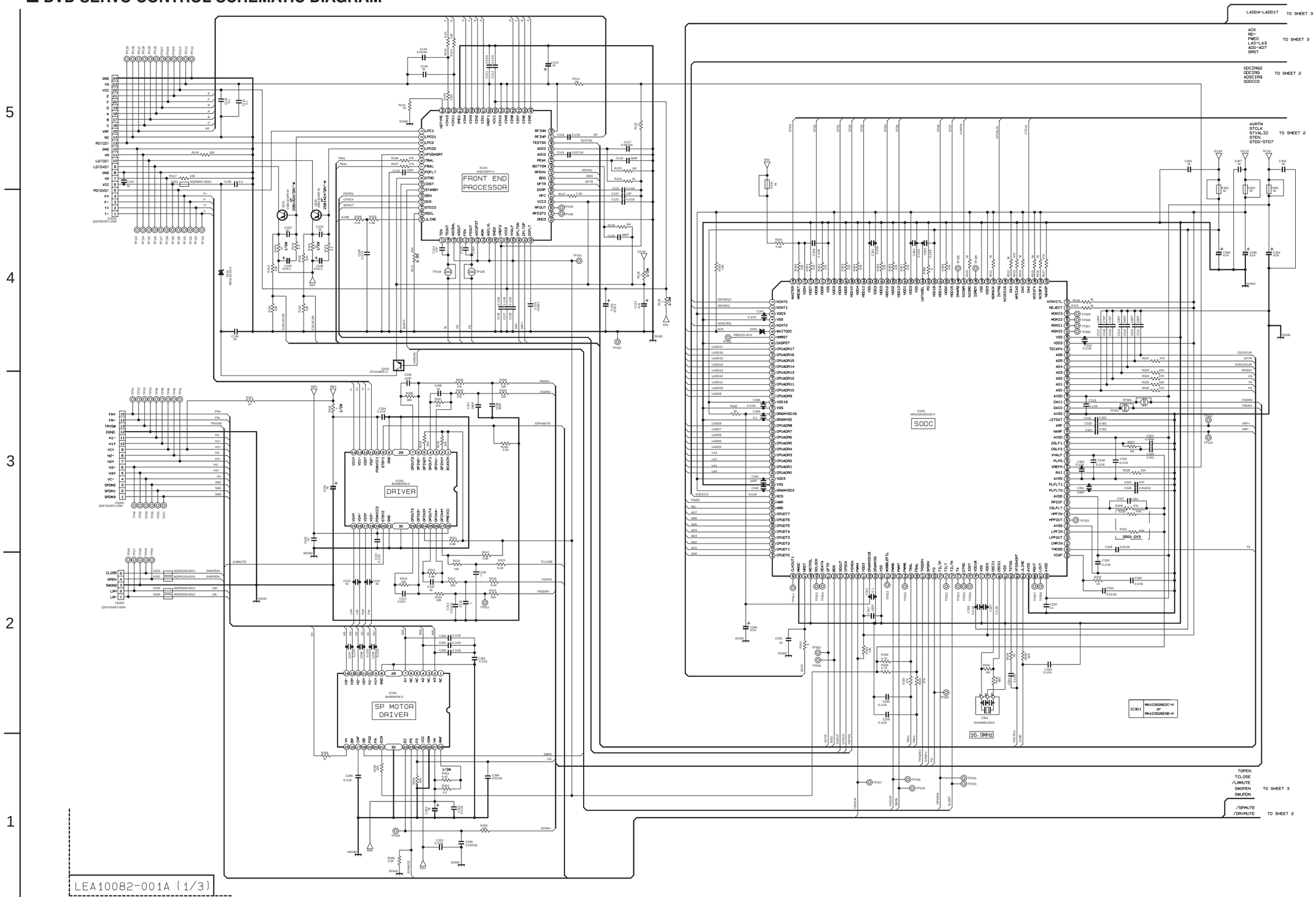

■ DVD AV DECODER SCHEMATIC DIAGRAM

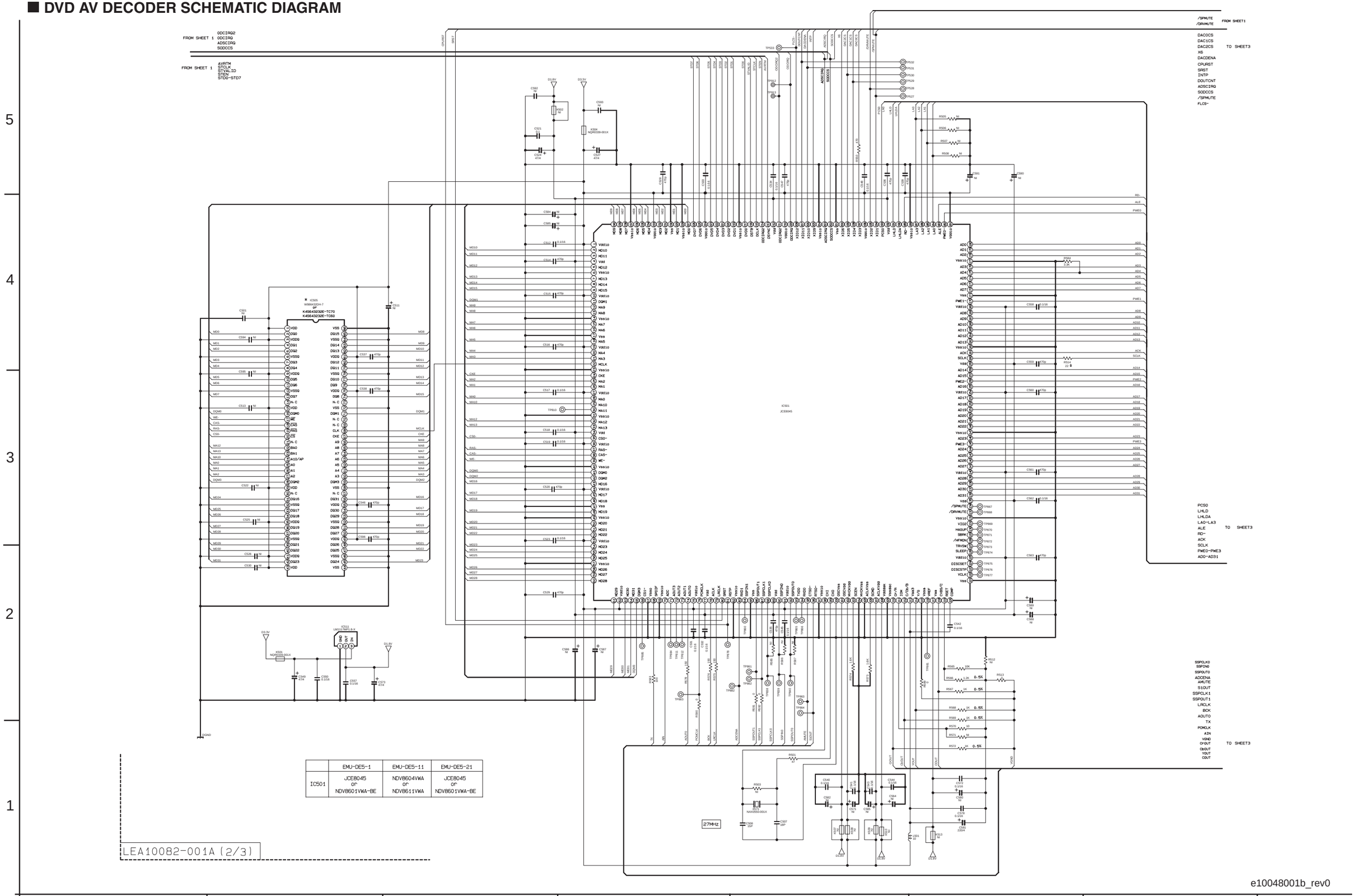

	EMU-DE5-1	EMU-DE5-11	EMU-DE5-21
IC501	JCE8045 or NDVB601VWA-BE	NDVB604VWA or NDVB611VWA	JCE8045 or NDVB601VWA-BE

■ DVD FLASH ROM SCHEMATIC DIAGRAM

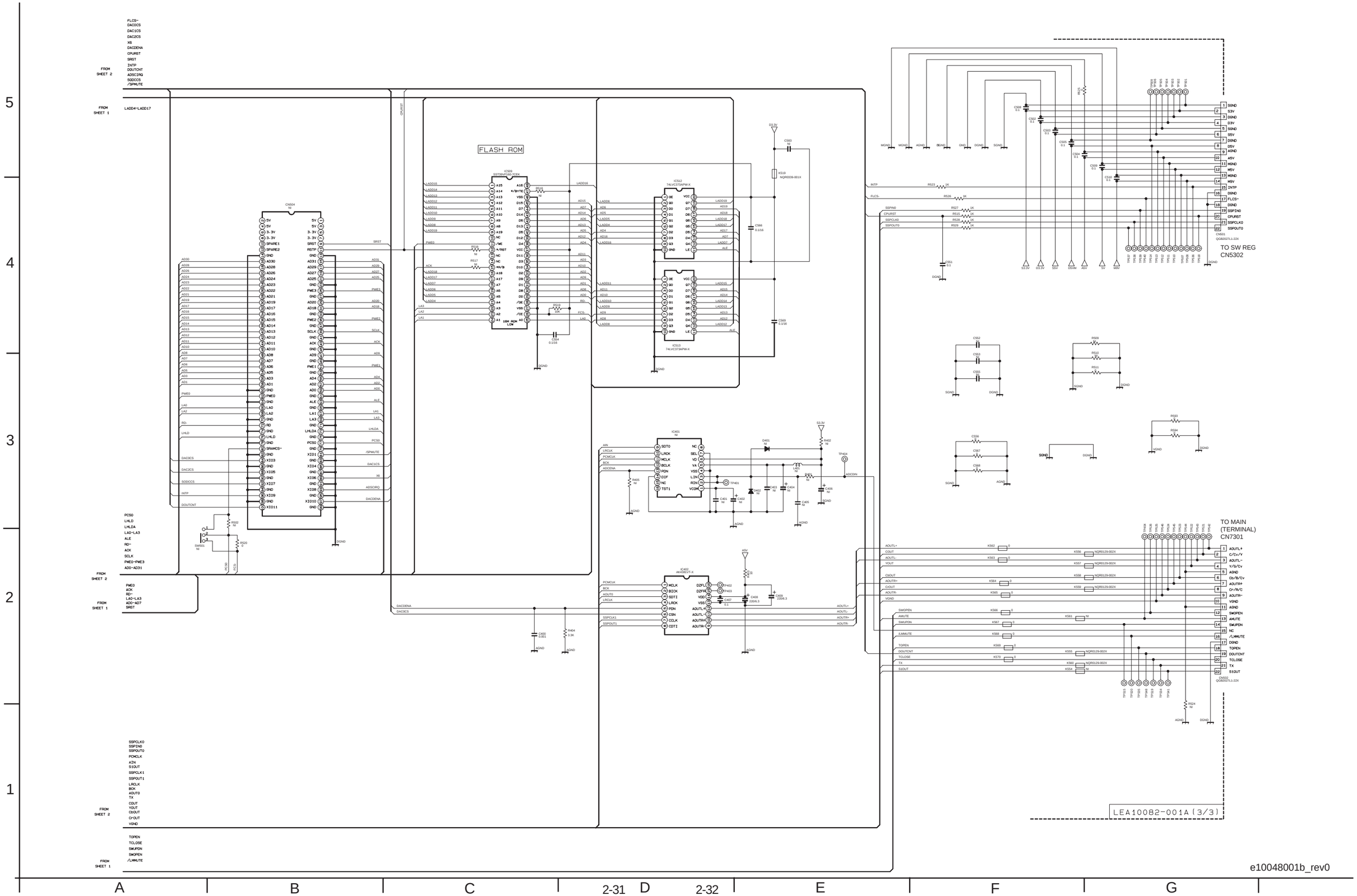

■ REGULATOR, JACK AND DISPLAY CIRCUIT BOARDS

<01> REGULATOR
LPB10206-001D

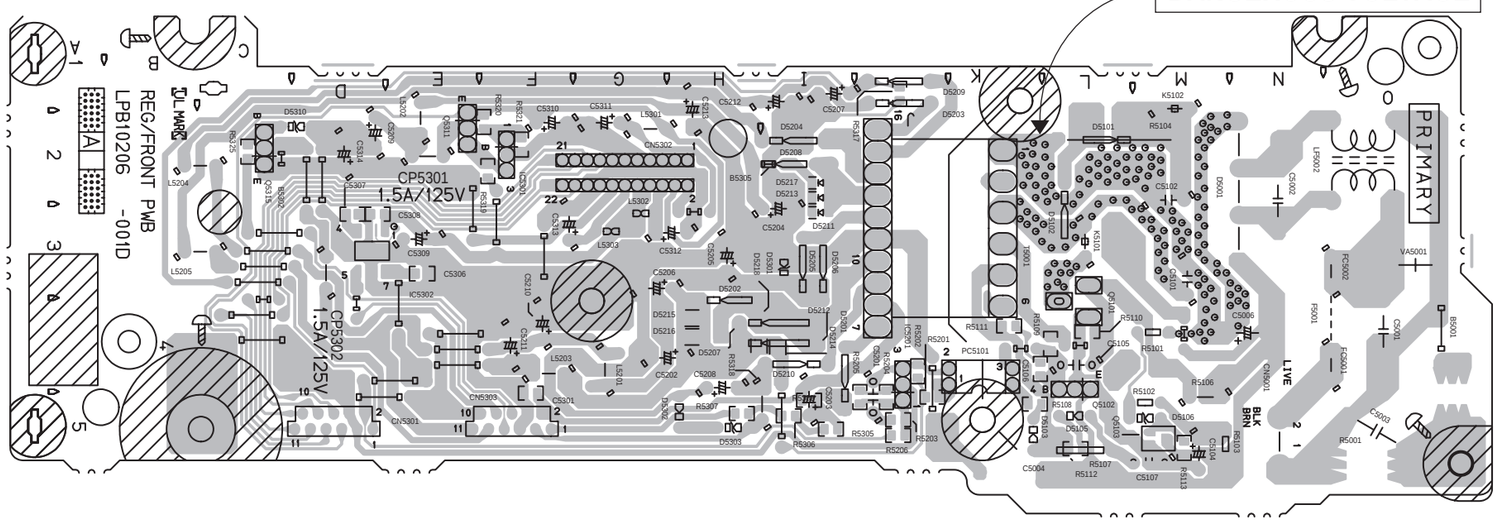

<36> JACK
LPB10206-001D

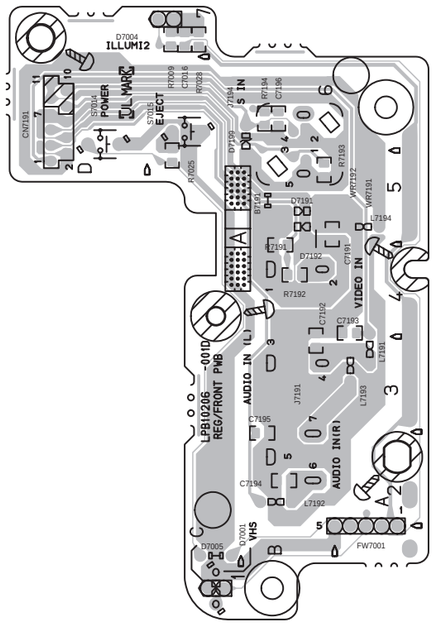

<28> DISPLAY
LPB10206-001D

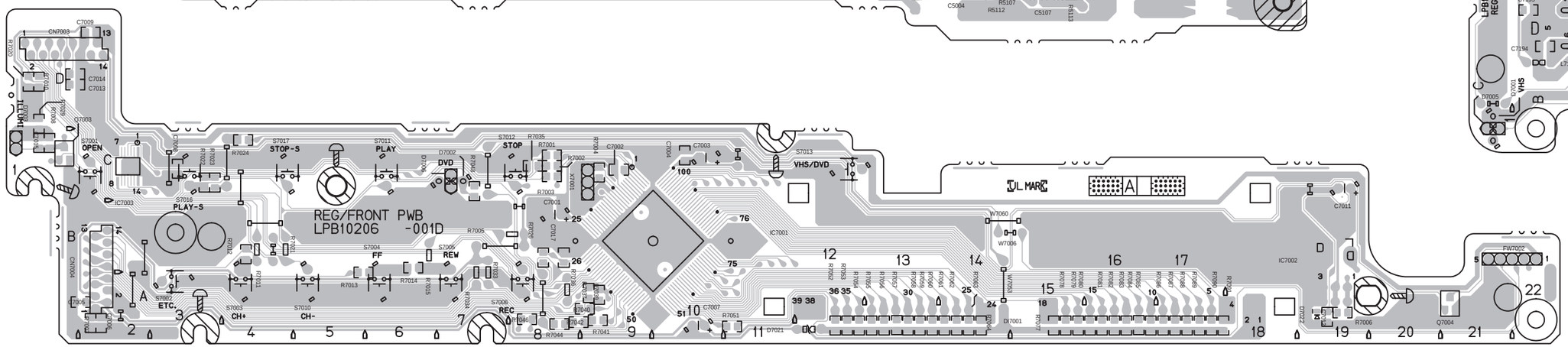

COMPONENT PARTS LOCATION GUIDE <REGULATOR> LPB10206-001C

REF.NO.	LOCATION	REF.NO.	LOCATION	REF.NO.	LOCATION	REF.NO.	LOCATION
CAPACITOR		**CONNECTOR**		**IC**		R5201	B C 5J
C5001	A D 4O	CN5001	A D 5N	IC5201	A D 5J	R5202	B C 4J
C5002	A D 3N	CN5301	A D 5D	IC5301	A D 2F	R5203	B C 5J
C5003	A D 5O	CN5302	A D 2H	IC5302	B C 3D	R5204	B C 5J
C5004	A D 5L	CN5303	A D 5F			R5205	B C 5J
C5006	A D 4N			**COIL**		R5206	B C 5J
C5101	A D 3M	**DIODE**		L5201	A D 4G	R5302	B C 5I
C5102	A D 2M	D5001	A D 2N	L5202	A D 1E	R5305	B C 5I
C5104	A D 5M	D5101	A D 2L	L5203	A D 4F	R5306	B C 5I
C5105	A D 4L	D5102	A D 3L	L5204	A D 2C	R5307	B C 5H
C5106	B C 4L	D5103	A D 5K	L5205	A D 3B	R5317	B C 1J
C5107	A D 5M	D5105	A D 5L	L5301	A D 2H	R5318	A D 4I
C5201	A D 4J	D5106	A D 5M	L5302	A D 3G	R5319	B C 2F
C5202	A D 4H	D5201	A D 4I	L5303	A D 3G	R5320	B C 2F
C5203	A D 5I	D5202	A D 4I			R5321	B C 2F
C5204	A D 3I	D5203	A D 1J	**TRANSISTOR**		R5325	B C 2C
C5205	A D 3H	D5204	A D 2I	Q5101	A D 3L		
C5206	A D 3H	D5205	A D 3I	Q5102	A D 4L	**OTHER**	
C5207	A D 1J	D5206	A D 3I	Q5103	B C 5M	CP5301	A D 2E
C5208	A D 4H	D5207	A D 4I	Q5311	A D 2E	CP5302	A D 3D
C5209	A D 2D	D5208	A D 2I	Q5315	A D 2C	F5001	A D 4O
C5210	A D 4F	D5209	A D 1J			FC5001	A D 4O
C5211	A D 4F	D5210	A D 4I	**RESISTOR**		FC5002	A D 3O
C5212	A D 1I	D5211	B C 3I	R5001	A D 5O	K5101	A D 3L
C5213	A D 1H	D5212	A D 4I	R5101	A D 4M	K5102	A D 1M
C5301	B C 5F	D5213	B C 2I	R5102	A D 5M	LF5002	A D 2O
C5306	B C 3E	D5214	B C 4I	R5103	A D 5N	PC5101	A D 4K
C5307	B C 3D	D5215	B C 4H	R5104	A D 2L	T5001	A D 2K
C5308	B C 3D	D5216	B C 4H	R5106	A D 5M	VA5001	A D 3P
C5309	A D 3E	D5217	B C 2I	R5107	A D 5L		
C5310	A D 2F	D5218	B C 4I	R5108	B C 5K		
C5311	A D 2G	D5301	A D 3I	R5109	B C 4L		
C5312	A D 3G	D5302	A D 5H	R5110	B C 4L		
C5313	A D 3G	D5303	A D 5H	R5111	B C 4K		
C5314	A D 2D	D5310	A D 2D	R5112	B C 5L		
				R5113	B C 5M		

COMPONENT PARTS LOCATION GUIDE <DISPLAY> LPB10206-001C

REF.NO.	LOCATION	REF.NO.	LOCATION	REF.NO.	LOCATION	REF.NO.	LOCATION
CAPACITOR				R7052	B C 12A	S7005	A D 7B
C7001	A D 9B	**RESISTOR**		R7053	B C 13A	S7006	A D 8B
C7002	B C 9C	R7001	B C 8C	R7054	B C 13A	S7010	A D 5B
C7003	A D 11C	R7002	B C 8C	R7055	B C 13A	S7011	A D 6C
C7004	B C 10C	R7003	B C 8C	R7056	B C 13A	S7012	A D 8C
C7005	B C 2A	R7004	B C 9C	R7057	B C 13A	S7013	A D 13C
C7006	B C 2A	R7005	A D 8B	R7058	B C 13A	S7016	A D 3C
C7007	A D 11A	R7006	B C 19A	R7059	B C 14A	S7017	A D 5C
C7008	B C 3C	R7007	B C 2A	R7060	B C 14A	X7001	A D 9C
C7009	B C 2E	R7008	B C 1C	R7061	B C 14A		
C7011	A D 20C	R7010	B C 1D	R7062	B C 14A		
C7012	B C 19A	R7011	A D 4B	R7063	B C 14A		
C7013	B C 2D	R7012	B C 4B	R7064	B C 14A		
C7014	B C 2D	R7013	B C 6B	R7077	B C 15A		
C7015	B C 1C	R7014	B C 7B	R7078	B C 16A		
C7017	B C 9B	R7015	A D 7B	R7079	B C 16A		
		R7020	B C 1D	R7080	B C 16A		
CONNECTOR		R7021	A D 5B	R7081	B C 16A		
CN7003	A D 1E	R7022	B C 4C	R7082	B C 16A		
CN7004	A D 2A	R7023	B C 4C	R7083	B C 16A		
		R7024	B C 4D	R7084	B C 17A		
DIODE		R7026	B C 8B	R7085	B C 17A		
D7002	A D 7C	R7029	B C 1D	R7086	B C 17A		
D7003	A D 1C	R7033	A D 8A	R7087	B C 17A		
D7006	A D 7C	R7034	A D 7A	R7088	B C 17A		
D7021	A D 12A	R7035	B C 8C	R7089	B C 17A		
D7022	B C 19A	R7036	A D 9A	R7090	B C 18A		
		R7037	B C 9A	R7091	B C 18A		
IC		R7039	B C 9A				
IC7001	B C 10B	R7040	B C 9A	**OTHER**			
IC7002	A D 19B	R7041	B C 9A	DI7001	A D 15B		
IC7003	B C 3C	R7042	B C 9A	FW7002	A D 22B		
		R7044	B C 9A	S7001	A D 2C		
TRANSISTOR		R7046	B C 8A	S7002	A D 3B		
Q7003	B C 2C	R7048	B C 7C	S7003	A D 4B		
Q7004	B C 21A	R7051	B C 11A	S7004	A D 6B		

■ MAIN CIRCUIT BOARD

<03> MAIN
LPB10215-001B

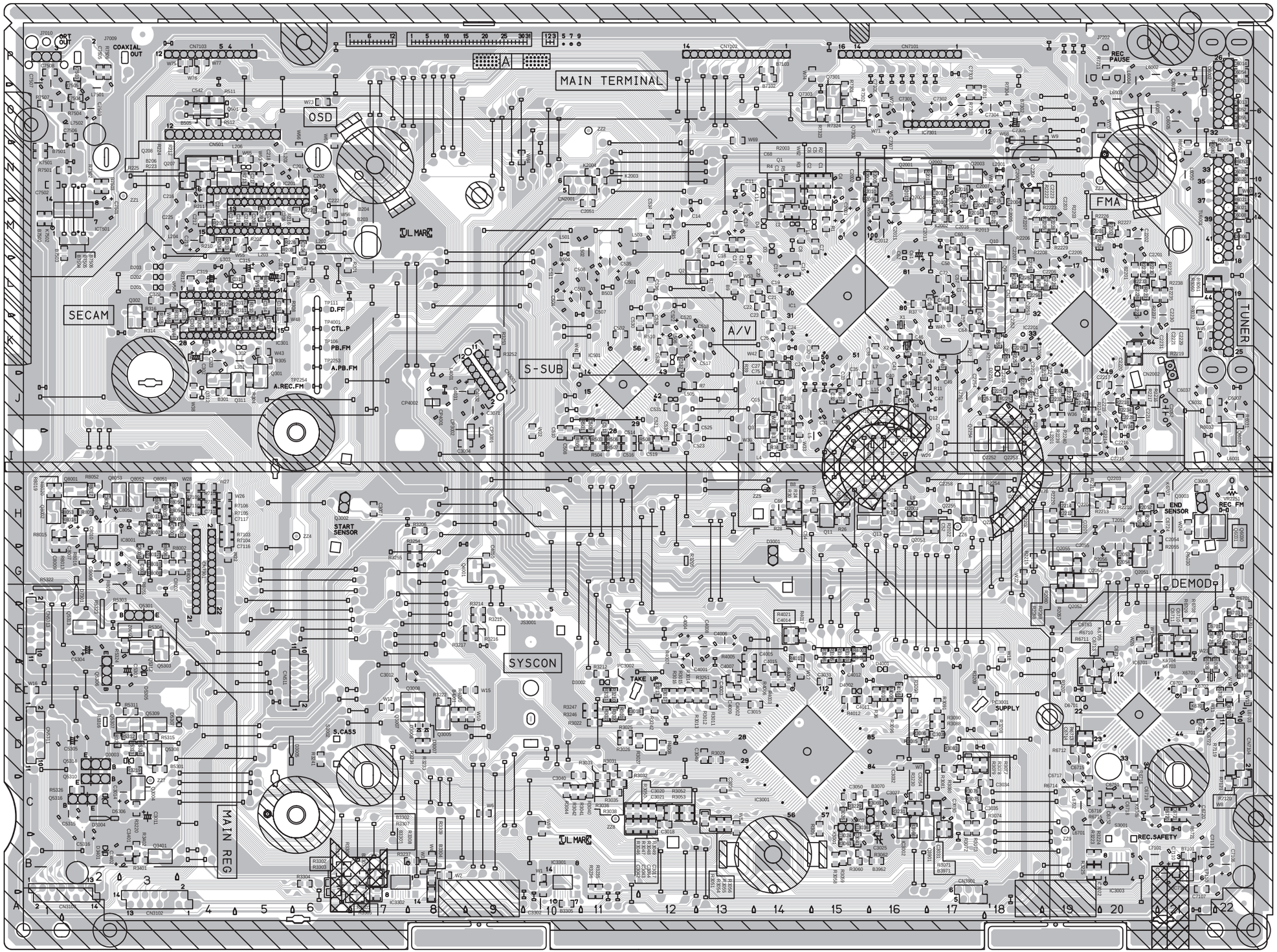

COMPONENT PARTS LOCATION GUIDE <MAIN> LPB10215-001B

REF.NO.	LOCATION
CAPACITOR	
C1	B C 15M
C2	B C 15M
C3	B C 14M
C4	A D 15N
C5	B C 15N
C6	B C 15N
C7	B C 15M
C8	B C 14M
C9	A D 13M
C10	A D 14L
C11	B C 13N
C12	A D 13M
C14	A D 12M
C15	B C 14L
C16	B C 13M
C17	B C 13M
C18	B C 13M
C19	B C 14L
C20	B C 14L
C21	B C 14L
C22	B C 14L
C23	B C 14L
C24	B C 14K
C25	A D 14K
C26	A D 15K
C27	B C 14K
C28	B C 14I
C29	B C 14J
C30	B C 15K
C31	A D 15J
C32	B C 15J
C33	A D 15J
C34	B C 16I
C35	B C 15J
C36	A D 15J
C37	B C 16J
C38	B C 16K
C39	A D 15J
C40	B C 16J
C41	B C 16J
C43	A D 16K
C44	A D 16K
C45	B C 16K
C46	B C 16K
C47	A D 16J
C48	B C 16J
C49	A D 17J
C50	B C 17J
C51	B C 16H
C52	B C 17H
C54	B C 14H
C55	B C 17L
C56	B C 17L
C57	B C 17L
C58	B C 17M
C59	B C 17M
C60	B C 17M
C61	A D 16L
C62	A D 16L
C63	B C 17K
C64	B C 17K
C66	B C 14H
C68	B C 14N
C71	A D 17L
C72	B C 17L
C73	B C 14J
C74	B C 14I
C75	B C 14J
C201	A D 6N
C202	B C 6N
C204	B C 6M
C206	B C 5M
C207	B C 5M
C208	B C 5M
C209	B C 5M
C210	B C 5M
C211	B C 5M
C212	B C 4M
C213	A D 4M
C214	B C 4M
C215	B C 4M
C216	A D 4N
C217	B C 5N
C218	A D 5N
C222	A D 6N
C225	A D 4M
C301	B C 4K
C302	A D 4K
C303	B C 4K
C304	B C 4K
C305	B C 4K
C307	B C 4K
C308	B C 5K
C309	B C 5K
C310	B C 5K
C311	B C 5L
C312	B C 5L
C313	A D 5L
C314	B C 5L
C315	A D 5L
C316	B C 5L
C317	B C 5L
C318	B C 4K
C319	A D 4L
C320	B C 3L
C321	B C 4L
C322	B C 4L
C323	A D 4K
C501	A D 11L
C502	B C 11K
C503	A D 10L
C504	A D 10L
C506	A D 11L
C507	B C 11L
C508	B C 10I
C509	B C 11J
C510	B C 10I

REF.NO.	LOCATION
C511	A D 10L
C513	B C 11J
C514	B C 11I
C515	B C 11I
C516	B C 11I
C517	A D 13K
C518	A D 13K
C519	B C 12I
C520	A D 12K
C521	B C 12I
C522	A D 12K
C523	B C 12I
C524	A D 12K
C525	B C 12J
C528	B C 12K
C529	B C 12K
C530	B C 12K
C531	B C 12J
C532	B C 12K
C534	B C 12M
C535	A D 11L
C536	B C 12L
C539	B C 12I
C542	B C 4O
C2001	A D 15M
C2002	A D 15M
C2003	A D 18N
C2004	B C 18M
C2005	A D 18M
C2006	B C 17M
C2007	A D 17N
C2008	A D 17M
C2009	B C 17M
C2010	B C 17M
C2011	A D 16M
C2012	A D 16M
C2013	B C 17M
C2016	B C 17M
C2017	B C 17N
C2051	B C 11M
C2052	A D 21J
C2053	B C 20G
C2054	B C 20H
C2055	A D 19G
C2201	A D 20L
C2202	A D 20M
C2203	A D 19M
C2204	A D 18N
C2205	A D 19L
C2206	A D 19L
C2207	B C 18M
C2208	B C 18K
C2209	A D 18K
C2210	A D 18K
C2211	A D 18J
C2212	A D 19J
C2213	B C 19J
C2214	A D 19I
C2215	A D 20I
C2216	A D 20J
C2217	B C 20J
C2218	A D 20J
C2219	A D 20J
C2220	A D 20J
C2221	B C 20K
C2222	B C 19J
C2223	B C 18N
C2224	B C 18J
C2225	B C 20L
C2226	B C 20L
C2227	A D 19K
C2228	B C 20J
C2229	B C 20K
C2230	A D 21K
C2231	A D 20K
C2232	B C 19J
C2233	B C 19J
C2251	B C 18L
C2252	B C 18L
C2253	B C 18L
C2254	A D 17J
C2255	B C 18K
C2256	B C 18L
C2257	B C 18J
C2258	B C 17I
C2259	A D 18J
C2261	B C 19L
C2262	B C 19L
C3004	B C 9I
C3007	B C 7H
C3008	B C 21I
C3011	A D 3C
C3012	A D 8E
C3014	A D 3C
C3015	B C 14E
C3016	B C 13C
C3017	B C 12C
C3018	B C 12C
C3020	B C 12C
C3021	B C 12C
C3022	B C 19B
C3024	B C 15B
C3025	A D 16B
C3026	B C 15C
C3027	A D 16C
C3030	A D 17C
C3031	B C 17C
C3032	B C 16D
C3033	B C 15E
C3034	B C 18C
C3035	B C 17C
C3036	B C 15C
C3037	B C 16C
C3038	B C 16D
C3039	B C 17D
C3040	B C 10D
C3041	B C 15B
C3042	B C 11C

REF.NO.	LOCATION
C3043	B C 11C
C3044	B C 12C
C3049	B C 13D
C3050	B C 15C
C3054	B C 16C
C3071	A D 9J
C3301	B C 6B
C3302	B C 10B
C3401	B C 3B
C3402	A D 3B
C4001	A D 12E
C4002	B C 13E
C4003	B C 13E
C4004	A D 12F
C4005	B C 13F
C4006	A D 13F
C4007	B C 13E
C4008	A D 13F
C4009	B C 13E
C4010	B C 9G
C4011	B C 15E
C4012	A D 15E
C4014	B C 14F
C4015	B C 14E
C4031	A D 8J
C4032	B C 9J
C5303	A D 3E
C5304	A D 2F
C5305	A D 2D
C5315	A D 2C
C5316	A D 2B
C6005	A D 21O
C6006	B C 22M
C6007	A D 22J
C6008	B C 22M
C6012	A D 21P
C6013	B C 22O
C6014	B C 22P
C6020	B C 22N
C6021	B C 22M
C6032	B C 21J
C6037	A D 21J
C6052	B C 22O
C6053	B C 22P
C6054	B C 22P
C6055	B C 22O
C6701	B C 22F
C6702	B C 22E
C6703	B C 22E
C6704	B C 22F
C6705	B C 22F
C6706	B C 22E
C6707	B C 21E
C6708	B C 22E
C6709	B C 21E
C6710	B C 21F
C6711	B C 21F
C6712	B C 20F
C6713	B C 19E
C6714	B C 19D
C6715	A D 19D
C6716	B C 19C
C6717	A D 19C
C6718	B C 20C
C6719	A D 20C
C6720	A D 21C
C6721	B C 21C
C6722	A D 21D
C6723	B C 21D
C6724	A D 21H
C6725	B C 21F
C6751	A D 20C
C6752	B C 20C
C6753	A D 19E
C7106	A D 22B
C7107	B C 21B
C7110	B C 21B
C7111	A D 21B
C7113	A D 21B
C7116	B C 4H
C7117	B C 4H
C7118	B C 4H
C7119	B C 4H
C7301	A D 16O
C7302	A D 17O
C7303	A D 17O
C7304	A D 18O
C7305	A D 18O
C7306	A D 16O
C7307	A D 16O
C7501	A D 2M
C7502	B C 1N
C7503	A D 2O
C7504	B C 2O
C7505	B C 2P
C7506	B C 2O
C7507	A D 1P
C7508	B C 1P
C8001	B C 3H
C8002	B C 3G
C8003	B C 3H
C8004	B C 3G
C8005	B C 3H
C8006	B C 3G
C8007	A D 2H
C8008	A D 2G
C8009	B C 1H
C8010	B C 2G
C8051	A D 3G
C8052	A D 2H
C8053	B C 2H
CONNECTOR	
CN1	A D 18L
CN501	A D 5O
CN511	A D 6E
CN2001	A D 11N
CN2002	A D 21K

REF.NO.	LOCATION
CN3001	A D 9J
CN3102	A D 4A
CN3103	A D 1B
CN3901	A D 17A
CN5311	A D 1E
CN5313	A D 1G
CN7101	A D 17P
CN7102	A D 14P
CN7103	A D 5P
CN7104	A D 22D
CN7301	A D 4H
DIODE	
D3	A D 14M
D4	A D 14M
D201	A D 3L
D202	A D 3L
D203	A D 3L
D2001	A D 16H
D2201	A D 18H
D2251	A D 18J
D3001	A D 14G
D3002	A D 11E
D3003	A D 3D
D3004	A D 2C
D3005	A D 5D
D3007	B C 8D
D3008	B C 8D
D3401	A D 2B
D4001	A D 16E
D4002	A D 15E
D5305	A D 3F
D5306	A D 2C
D5307	A D 4E
D6002	A D 21P
D6701	A D 19E
D7301	A D 2F
IC	
IC1	B C 15L
IC201	A D 6M
IC301	A D 4L
IC501	B C 11J
IC2201	B C 19K
IC3001	B C 14D
IC3002	B C 16C
IC3003	B C 20B
IC3301	B C 10B
IC3302	B C 7B
IC6701	B C 20E
IC7102	B C 21B
IC7301	A D 16O
IC7501	B C 2M
IC8001	B C 2H
COIL	
L1	A D 15M
L2	A D 14M
L3	A D 13M
L4	A D 14I
L5	A D 15J
L6	A D 15I
L7	A D 16J
L9	A D 16H
L10	A D 17K
L11	A D 14N
L14	A D 14J
L15	A D 16J
L201	A D 5N
L202	A D 6M
L203	A D 5M
L204	A D 4M
L206	A D 5N
L301	A D 4K
L302	A D 5K
L303	A D 5L
L501	A D 10M
L502	A D 11L
L503	A D 12M
L505	A D 12J
L506	A D 12K
L2001	A D 18N
L2201	A D 19J
L2251	A D 17J
L2252	A D 18J
L4001	A D 8J
L6001	A D 22I
L6002	A D 21P
L6003	A D 20O
L6004	A D 20O
L6005	A D 20O
L6050	A D 21N
L6701	A D 19C
L6702	A D 19C
L6703	A D 22E
L7101	A D 20B
L7110	A D 21B
L7501	A D 2O
L7502	A D 2O
TRANSISTOR	
Q1	B C 14N
Q2	B C 12L
Q3	B C 14J
Q4	B C 16J
Q6	B C 16H
Q7	B C 17L
Q8	B C 17L
Q9	B C 18L
Q10	B C 18M
Q11	B C 15H
Q12	B C 16J
Q13	B C 16H
Q15	B C 14J
Q207	B C 4N
Q208	B C 4N
Q301	B C 5J
Q302	B C 3K

REF.NO.	LOCATION
Q311	B C 5J
Q312	B C 4J
Q501	B C 4O
Q2001	B C 16N
Q2002	B C 17N
Q2003	B C 17N
Q2004	B C 16N
Q2051	B C 20G
Q2052	B C 19G
Q2053	B C 16H
Q2054	B C 19G
Q2055	B C 19G
Q2201	B C 19H
Q2202	B C 18H
Q2203	B C 20H
Q2204	B C 19H
Q2251	B C 18H
Q2252	B C 18I
Q2253	B C 18I
Q2254	B C 17I
Q2255	B C 17H
Q3002	A D 7H
Q3003	A D 21H
Q3004	B C 3C
Q3005	B C 8E
Q3007	B C 8E
Q3008	B C 8E
Q3401	B C 3B
Q3901	B C 17C
Q4001	B C 9G
Q5301	A D 3F
Q5302	B C 3F
Q5303	B C 3F
Q5306	A D 2F
Q5307	B C 3D
Q5308	B C 3D
Q5309	B C 3D
Q5310	A D 2C
Q5312	B C 3F
Q5313	B C 2F
Q5314	A D 2D
Q5316	A D 2C
Q6030	B C 22H
Q6031	B C 21H
Q6032	B C 22I
Q6701	B C 22F
Q7301	B C 15O
Q7302	B C 15O
Q7303	B C 14O
Q8001	B C 2H
Q8002	B C 1H
Q8051	B C 3H
Q8052	B C 3H
Q8053	B C 2H
RESISTOR	
R1	B C 15M
R2	B C 15N
R3	B C 14N
R4	B C 14M
R5	B C 14M
R6	B C 13M
R7	B C 12J
R11	B C 16J
R12	B C 16K
R14	B C 16J
R17	B C 16J
R18	B C 15J
R20	B C 14J
R21	B C 18K
R22	B C 17K
R23	B C 16H
R24	B C 14H
R25	B C 16H
R26	B C 15H
R28	B C 14H
R29	B C 15H
R30	B C 14H
R31	B C 16J
R33	B C 14J
R34	B C 14I
R35	B C 12M
R36	B C 16E
R37	B C 16L
R38	B C 14J
R39	B C 14K
R201	B C 6L
R202	B C 5M
R203	B C 4M
R204	B C 4M
R208	B C 5M
R209	B C 4M
R210	B C 4M
R211	B C 4N
R212	B C 4N
R213	B C 5N
R216	B C 6M
R220	B C 6M
R223	B C 4N
R224	B C 4N
R225	B C 4N
R226	B C 5M
R301	B C 4K
R302	B C 4K
R303	B C 4K
R304	B C 5J
R305	B C 5K
R306	B C 5K
R307	B C 5L
R308	B C 5L
R309	B C 5L
R310	B C 5L
R311	B C 5L
R312	B C 4L
R313	B C 3K
R314	B C 3K
R315	B C 3K
R316	B C 3L

REF.NO.	LOCATION
R321	B C 4K
R326	B C 4L
R327	B C 4L
R328	B C 4L
R329	B C 4L
R501	B C 11J
R503	B C 11I
R504	B C 11I
R505	B C 10I
R506	B C 11I
R507	B C 11I
R508	B C 12I
R510	B C 12K
R511	B C 4O
R512	B C 4O
R2003	B C 14N
R2005	B C 16N
R2007	B C 15N
R2008	B C 16N
R2010	B C 16N
R2013	B C 17M
R2014	B C 17M
R2015	B C 18M
R2016	B C 17N
R2017	B C 16N
R2018	B C 17N
R2019	B C 17N
R2021	B C 18M
R2022	B C 17H
R2023	B C 17H
R2051	B C 20H
R2052	B C 20H
R2053	B C 20H
R2054	B C 20G
R2055	B C 20G
R2056	A D 19G
R2057	B C 19G
R2058	B C 19G
R2059	B C 19G
R2060	B C 19G
R2201	B C 19M
R2202	B C 20M
R2203	B C 19M
R2204	B C 19M
R2205	B C 19M
R2206	B C 19M
R2207	B C 18M
R2208	B C 19M
R2209	B C 19I
R2210	B C 20H
R2211	B C 19H
R2212	B C 19H
R2213	B C 20H
R2214	B C 19H
R2215	B C 18G
R2216	B C 20J
R2217	B C 20J
R2218	B C 20J
R2219	B C 20K
R2220	B C 19H
R2222	B C 18N
R2223	B C 18M
R2224	B C 18J
R2225	B C 18J
R2226	B C 19M
R2227	B C 20M
R2228	B C 19M
R2229	B C 19M
R2230	B C 20L
R2231	B C 20L
R2232	B C 20L
R2233	B C 20L
R2234	B C 20J
R2235	B C 21L
R2236	B C 21L
R2238	B C 21L
R2239	B C 19J
R2240	B C 19J
R2241	B C 19J
R2242	B C 19J
R2243	B C 19J
R2244	B C 19J
R2251	B C 18J
R2252	B C 18K
R2253	B C 18J
R2254	B C 18H
R2255	B C 18J
R2256	B C 18J
R2257	B C 18K
R3011	B C 13E
R3012	B C 13E
R3013	B C 13E
R3014	B C 12E
R3015	B C 12E
R3016	B C 12E
R3017	B C 12E
R3018	B C 11E
R3019	B C 11E
R3020	B C 11E
R3021	B C 11E
R3022	B C 11D
R3025	B C 11D
R3026	B C 11D
R3027	B C 12D
R3029	B C 13D
R3031	B C 11D
R3032	B C 11D
R3033	B C 11D
R3035	B C 11C
R3036	B C 11C
R3038	B C 11C
R3040	B C 11C
R3041	B C 11C
R3042	B C 10C
R3044	B C 10C
R3046	B C 11C
R3047	B C 11C

REF.NO.	LOCATION
R3048	B C 12C
R3049	B C 12C
R3050	B C 12C
R3051	B C 13C
R3052	B C 12C
R3053	B C 12C
R3054	B C 13C
R3055	B C 13C
R3056	B C 13C
R3057	B C 15C
R3058	B C 15B
R3059	B C 15B
R3060	B C 15B
R3062	B C 15B
R3063	B C 15B
R3066	B C 16C
R3069	B C 16C
R3071	B C 17C
R3072	B C 17C
R3073	B C 17C
R3074	B C 17C
R3075	B C 17C
R3076	B C 17C
R3077	B C 17D
R3078	B C 17D
R3079	B C 17D
R3080	B C 17D
R3081	B C 17D
R3083	B C 17D
R3085	B C 16D
R3086	B C 16D
R3088	B C 17D
R3090	B C 17E
R3091	B C 17E
R3094	B C 16E
R3096	B C 16E
R3103	B C 15F
R3104	B C 15F
R3105	B C 15F
R3106	B C 15F
R3205	A D 12G
R3206	B C 8H
R3207	B C 19E
R3208	B C 18D
R3209	B C 17E
R3210	B C 11E
R3211	B C 11E
R3212	B C 11E
R3213	B C 12E
R3214	B C 9F
R3215	B C 9F
R3216	B C 9F
R3217	B C 9F
R3218	B C 2D
R3219	B C 3D
R3220	B C 3C
R3222	B C 8E
R3223	B C 19B
R3224	B C 19B
R3225	B C 19B
R3229	B C 15C
R3230	B C 16C
R3231	B C 16C
R3233	B C 8D
R3234	B C 8D
R3235	B C 11B
R3236	B C 11B
R3237	B C 8B
R3241	B C 6D
R3242	B C 12E
R3246	B C 11E
R3247	B C 11E
R3251	B C 13E
R3252	B C 9K
R3253	B C 9K
R3254	B C 8G
R3255	B C 8G
R3301	B C 6B
R3302	B C 6A
R3303	B C 6B
R3304	B C 6B
R3305	B C 7A
R3306	B C 6B
R3307	B C 7B
R3308	B C 7A
R3309	B C 8B
R3401	B C 3B
R3402	B C 3B
R4001	B C 15F
R4003	B C 14E
R4004	B C 14E
R4005	B C 13E
R4006	B C 13E
R4007	B C 12F
R4008	B C 12D
R4009	B C 16E
R4010	B C 16E
R4012	B C 15E
R4013	B C 14F
R4015	B C 15F
R4016	B C 16E
R4017	B C 14F
R4020	B C 8E
R4021	B C 14F
R5303	B C 3F
R5304	B C 3F
R5311	B C 3E
R5312	B C 3D
R5313	B C 3D
R5314	B C 3D
R5315	B C 3D
R5316	A D 2D
R5322	A D 1G
R5323	A D 2F
R5324	B C 3F
R5326	B C 2C
R6020	B C 22N
R6021	B C 22N

REF.NO.	LOCATION
R6030	B C 21G
R6031	B C 22J
R6032	B C 21K
R6033	B C 21J
R6050	B C 22O
R6052	B C 21N
R6053	B C 22N
R6054	B C 22N
R6060	B C 21L
R6061	B C 22L
R6080	B C 21N
R6701	B C 22F
R6702	B C 22F
R6703	B C 22F
R6704	B C 22F
R6705	B C 22F
R6706	B C 21F
R6709	B C 21F
R6710	B C 21F
R6711	B C 19E
R6712	B C 19D
R6713	B C 19D
R6714	B C 19C
R6715	B C 19C
R6716	B C 20D
R6720	B C 21C
R6721	B C 21C
R7103	B C 4H
R7104	B C 4H
R7105	B C 4H
R7106	B C 4H
R7107	B C 4H
R7108	B C 4H
R7109	B C 4H
R7110	B C 4H
R7119	B C 22D
R7120	B C 22D
R7121	B C 22C
R7211	B C 20P
R7301	B C 15O
R7302	B C 15O
R7303	B C 17O
R7304	B C 18O
R7323	B C 15O
R7324	B C 15O
R7501	B C 2N
R7502	B C 2N
R7503	B C 2N
R7504	B C 2O
R7505	B C 2O
R7506	B C 2P
R7507	B C 1O
R8001	B C 4H
R8002	B C 4G
R8003	B C 4H
R8004	B C 4G
R8005	B C 3H
R8006	B C 3G
R8007	B C 3H
R8008	B C 3G
R8009	B C 3H
R8010	B C 3G
R8011	B C 3H
R8012	B C 3G
R8013	B C 2H
R8014	B C 2G
R8015	B C 1H
R8016	B C 2G
R8017	B C 2H
R8018	B C 2H
R8019	B C 1H
R8020	B C 1H
R8051	A D 3G
R8052	A D 2H
R8053	B C 2H
R8054	B C 4H
R8055	B C 3H
R8056	B C 3H
R8057	B C 2H
OTHER	
CP3001	A D 9I
CP3002	B C 9I
CP4001	A D 8J
CP4002	B C 8J
J7009	A D 2Q
J7010	A D 1Q
J7202	A D 20P
JS3001	A D 10F
K2001	B C 17M
K2002	B C 17M
K2003	B C 11N
K2004	B C 11N
K2251	B C 18L
K2252	B C 18L
K2253	B C 18L
K6701	B C 21E
K6702	B C 21E
K6703	B C 21F
K6704	B C 21F
K6705	B C 20E
K6706	B C 20C
K6707	B C 21H
K7501	B C 1N
K7502	B C 1M
K7503	B C 2P
PC01031	B C 3P
PC01035	B C 22A
PC3001	A D 17E
PC3002	A D 11E
S3001	A D 20B
S3002	A D 6D
T2051	A D 20G
TP106	A D 6K
TP111	A D 6L
TP2253	A D 6K

REF.NO.	LOCATION
TP2254	A D 6J
TP3901	B C 13C
TP3902	B C 13C
TP3903	B C 15B
TP3904	B C 17B
TP3905	B C 15C
TP3906	B C 13C
TP3907	B C 15C
TP3908	B C 15B
TP4001	A D 6K
TU6001	A D 22P
VR2251	A D 22H
X1	A D 16K
X2	A D 16K
X3001	A D 15C
X3002	A D 15C
X6701	A D 22E

■ SWITCH AND DVD SERVO CONTROL CIRCUIT BOARDS

<98> SWITCH
LEB10070-001A

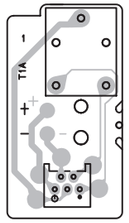

<99> DVD SERVO CONTROL
LEB10082-001B

-COMPONENT SIDE-

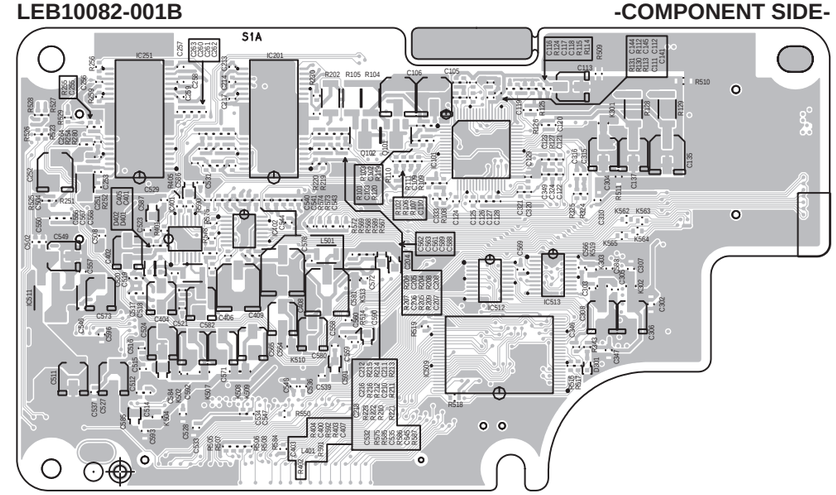

-FOIL SIDE-

<99> DVD SERVO CONTROL
LEB10082-001B

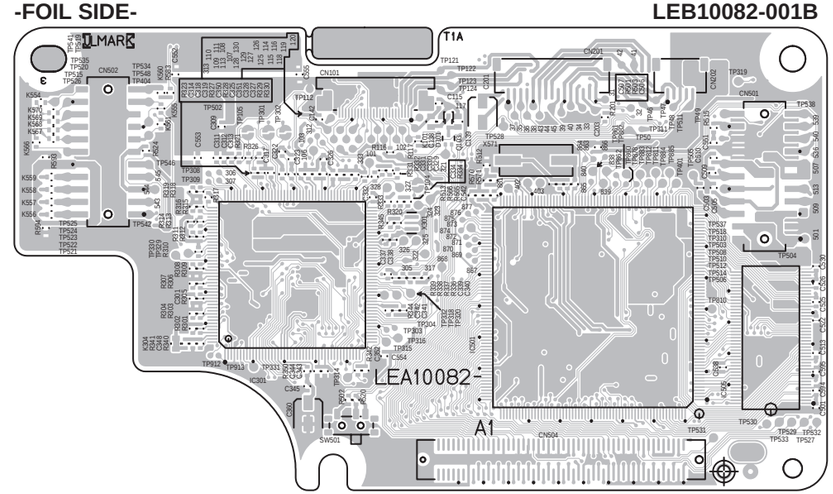

■ TERMINAL AND 2D DIGITAL CIRCUIT BOARDS

<06> TERMINAL
LPB10216-001B

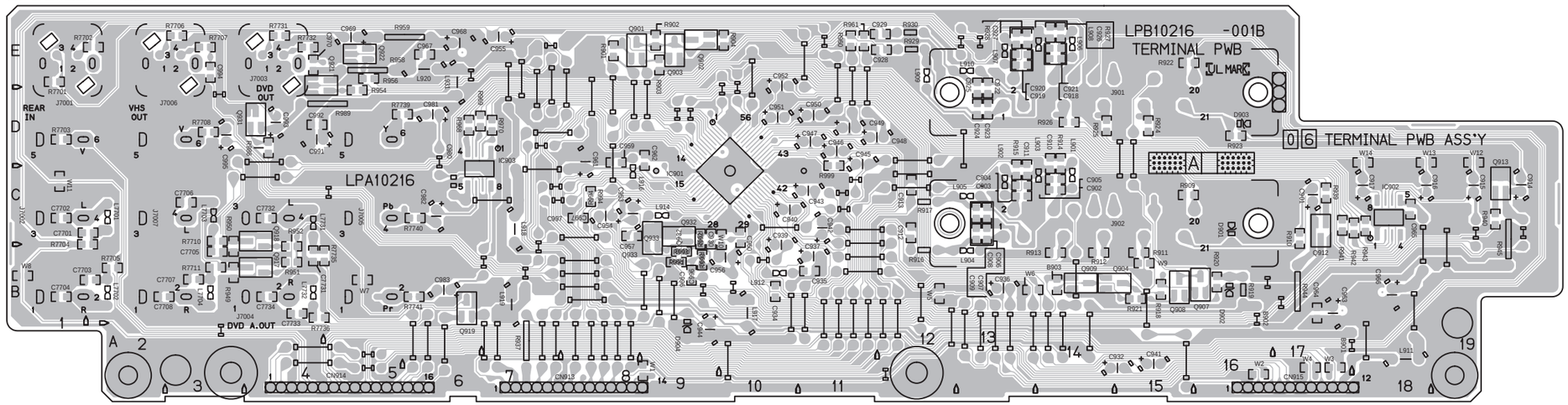

COMPONENT PARTS LOCATION GUIDE <TERMINAL> LPB10216-001B

REF.NO.	LOCATION	REF.NO.	LOCATION	REF.NO.	LOCATION	REF.NO.	LOCATION	REF.NO.	LOCATION	REF.NO.	LOCATION	REF.NO.	LOCATION	REF.NO.	LOCATION
CAPACITOR		C928	B C 11E	C960	B C 10C	C7707	B C 3B	L905	A D 13C	Q908	B C 15B	R919	A D 16B	R960	B C 11E	R7740	B C 5C
C901	A D 17C	C929	B C 11E	C961	A D 8C	C7708	B C 2B	L906	A D 14E	Q909	B C 14B	R920	B C 16B	R961	B C 11E	R7741	B C 5B
C902	B C 14C	C930	B C 9C	C962	B C 8D	C7731	B C 4B	L907	A D 13E	Q912	B C 17C	R921	B C 15B	R968	B C 6D		
C903	B C 13C	C932	A D 14A	C963	A D 17B	C7732	B C 4C	L908	A D 13E	Q913	B C 19C	R922	B C 15E	R969	B C 6D	**OTHER**	
C904	B C 13C	C934	B C 10B	C964	B C 17B	C7733	B C 4B	L909	A D 12D	Q917	B C 3B	R923	B C 16D	R970	B C 6D	J901	A D 14D
C905	B C 14C	C935	B C 10B	C965	B C 18C	C7734	B C 4B	L910	A D 13E	Q918	B C 3C	R924	B C 15D	R986	B C 4D	J902	A D 14C
C906	B C 13C	C936	A D 13B	C966	A D 18B			L911	A D 18A	Q919	B C 6B	R925	B C 14D	R989	A D 4D	J7001	A D 1E
C907	B C 13C	C937	A D 10B	C967	B C 6E	**CONNECTOR**		L912	A D 10B	Q921	B C 4E	R926	B C 14D	R990	B C 9B	J7002	A D 1C
C908	B C 13C	C939	A D 10B	C968	A D 6E	CN913	A D 7A	L914	A D 9C	Q922	B C 5E	R927	B C 14E	R991	B C 9B	J7003	A D 4E
C909	B C 13C	C940	A D 10C	C969	A D 5E	CN914	A D 4A	L916	A D 8C	Q931	B C 3D	R928	B C 13E	R992	B C 9C	J7004	A D 4B
C910	B C 14D	C941	A D 15A	C970	B C 4E	CN915	A D 16A	L917	A D 10A	Q932	B C 9C	R929	A D 12E	R993	B C 9B	J7005	A D 5C
C911	B C 13C	C942	A D 11C	C980	A D 6C			L918	A D 7C	Q933	B C 8C	R930	A D 12E	R994	B C 8C	J7006	A D 2E
C912	B C 12C	C943	A D 10C	C981	A D 6D	**DIODE**		L919	A D 7B			R937	A D 7A	R999	B C 11D	J7007	A D 2C
C913	B C 12C	C944	A D 9B	C982	A D 6C	D901	A D 16C	L920	A D 6E	**RESISTOR**		R939	B C 17C	R7701	B C 1E	PC08	B C 21P
C914	A D 19C	C945	A D 11D	C983	A D 6B	D902	A D 16B	L931	A D 6E	R901	B C 8E	R940	B C 19C	R7702	B C 1E		
C915	A D 19C	C946	A D 11D	C991	A D 4D	D903	A D 16D	L7701	A D 2C	R902	B C 9E	R941	B C 17C	R7703	B C 1D		
C916	A D 18C	C947	A D 10D	C992	B C 4D	D904	A D 9A	L7702	A D 2B	R903	B C 9E	R942	B C 17C	R7704	B C 1C		
C917	A D 17C	C948	A D 11D	C993	A D 4D			L7703	A D 3C	R904	B C 9E	R943	B C 18C	R7705	B C 2B		
C918	B C 14E	C949	A D 11D	C994	B C 3E	**IC**		L7704	A D 3B	R909	B C 15C	R944	A D 17B	R7706	B C 2E		
C919	B C 13E	C950	A D 10D	C995	A D 3D	IC901	B C 9C	L7731	A D 4C	R910	B C 17C	R945	A D 19B	R7707	B C 3E		
C920	B C 13E	C951	A D 10D	C996	B C 9B	IC902	B C 18C	L7732	A D 4B	R911	B C 15B	R949	B C 3B	R7708	B C 3D		
C921	B C 14E	C952	A D 10E	C997	B C 8C	IC903	B C 6C			R912	B C 14B	R950	B C 3B	R7710	B C 3C		
C922	B C 13D	C953	A D 8C	C7701	B C 1C			**TRANSISTOR**		R913	B C 14B	R951	B C 4B	R7711	B C 3B		
C923	B C 13D	C954	A D 8C	C7702	B C 1C	**COIL**		Q901	B C 8E	R914	B C 14D	R952	B C 4B	R7731	B C 4E		
C924	B C 13D	C955	A D 7E	C7703	B C 1B	L901	A D 14C	Q902	B C 9E	R915	B C 13C	R954	B C 5D	R7732	B C 4E		
C925	B C 13D	C956	A D 10B	C7704	B C 1B	L902	A D 13C	Q903	B C 9E	R916	A D 12B	R956	B C 5E	R7735	B C 4B		
C926	B C 14E	C957	B C 8C	C7705	B C 3B	L903	A D 13C	Q904	B C 14B	R917	A D 12C	R958	A D 5E	R7736	B C 4B		
C927	B C 13E	C959	B C 8D	C7706	B C 3C	L904	A D 13B	Q907	B C 15B	R918	B C 15B	R959	A D 6E	R7739	B C 5D		

<05> 2D DIGITAL
LPB10162-001C

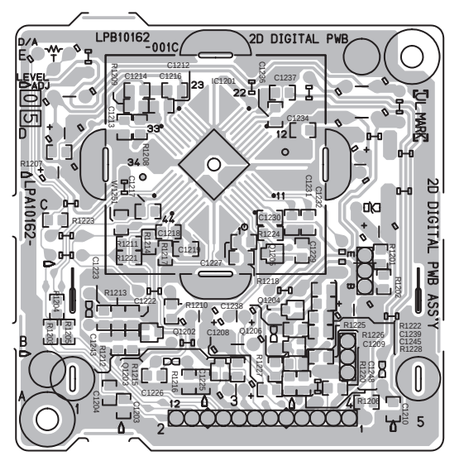

COMPONENT PARTS LOCATION GUIDE <2D DIGITAL> LPB10162-001C

REF.NO.	LOCATION	REF.NO.	LOCATION	REF.NO.	LOCATION	REF.NO.	LOCATION
CAPACITOR		C1230	B C 3C	L1208	A D 3B	R1218	B C 3C
C1201	A D 4C	C1231	B C 3C			R1220	B C 3A
C1211	A D 1D	C1232	B C 4C	**TRANSISTOR**		R1221	B C 2C
C1215	A D 1D	C1234	B C 4D	Q1201	A D 4C	R1222	B C 4B
C1220	A D 3B	C1236	B C 3D	Q1202	B C 2B	R1223	B C 1C
C1228	A D 3B	C1237	B C 3E	Q1203	B C 3B	R1224	B C 3C
C1233	A D 4C	C1238	B C 3B	Q1204	B C 3B	R1225	B C 3B
C1235	A D 4D	C1239	B C 4B	Q1205	B C 3C	R1226	B C 4B
C1244	A D 3A	C1243	B C 2B	Q1206	B C 3B	R1227	B C 3B
C1246	A D 4B	C1245	B C 4B			R1228	B C 4B
C1203	B C 2A	C1248	B C 4A	**RESISTOR**			
C1204	B C 1A			R1201	B C 4C		
C1208	B C 3A	**CONNECTOR**		R1202	B C 4C	**OTHER**	
C1209	B C 4A	CN1201	A D 4A	R1203	B C 1B	LC1201	A D 4B
C1210	B C 5A			R1204	B C 1B	VR1201	A D 1E
C1212	B C 2D	**DIODE**		R1205	B C 1B		
C1213	B C 2D	D1201	A D 4C	R1206	B C 4A		
C1214	B C 2E			R1207	B C 1D		
C1216	B C 2E	**IC**		R1208	B C 2D		
C1217	B C 2C	IC1201	B C 3D	R1209	B C 2D		
C1218	B C 2C	**COIL**		R1210	B C 2B		
C1219	B C 2C	L1201	A D 4B	R1211	B C 2C		
C1222	B C 2B	L1202	A D 1D	R1212	B C 2B		
C1223	B C 1B	L1203	A D 4E	R1213	B C 2B		
C1225	B C 2A	L1204	A D 3B	R1214	B C 2C		
C1226	B C 2B	L1205	A D 1B	R1215	B C 3B		
C1227	B C 3C	L1206	A D 2B	R1216	B C 2A		
C1229	B C 4C	L1207	A D 4D	R1217	B C 2C		

■ VOLTAGE CHARTS

<SW.REG>

MODE PIN NO.	REC	PLAY
IC5201		
1	2.4	2.4
2	0	0
3	4.6	4.6
IC5301		
1	2.4	2.4
2	0	0
3	4.0	4.0
IC5302		
1	5.0	5.0
2	1.0	1.3
3	0	0
4	3.4	3.4
5	5.0	5.1
6	0	0
7	5.6	5.6
Q5101		
D	304.4	305.0
S	0	0
G	2.7	2.6
Q5102		
E	0	0
C	2.7	2.6
B	0	0
Q5103		
E	2.7	2.6
C	0	0
B	11.3	11.2
Q5311		
E	3.2	3.3
C	3.5	3.5
B	4.0	4.0
Q5315		
E	9.1	9.1
C	11.7	11.7
B	9.7	9.7
CN5301		
1	47.2	47.0
2	5.6	5.6
3	0	0
4	0	0
5	3.3	3.2
6	3.0	3.0
7	3.2	3.2
8	3.0	3.0
9	3.0	3.0
10	3.2	3.2
11	0	0
CN5302		
1	0	0
2	3.2	3.2
3	0	0
4	3.2	3.2
5	0	0
6	4.8	4.8
7	0	0
8	5.0	5.0
9	0	0
10	5.0	5.0
11	0	0
12	5.0	5.0
13	0	0
14	9.1	9.1
15	3.0	3.0
16	0	0
17	3.2	3.2
18	0	0
19	3.0	3.0
20	3.0	3.0
21	3.2	3.2
22	0	0
CN5303		
1	-16.6	-16.5
2	-21.5	-21.4
3	-28.0	-27.9
4	0	0
5	0	0
6	10.6	10.6
7	5.1	5.1
8	0.2	0
9	0	0
10	0	0
11	11.7	11.7

<MAIN>

MODE PIN NO.	REC	PLAY
IC1		
1	0.1	0.1
2	0.1	0.2
3	0.1	0
4	0.1	0.3
5	0.1	0.2
6	0.1	0
7	0.1	2.8
8	0.1	0.3
9	0.1	0.3
10	0.1	0.3
11	0.2	0.2
12	0.2	0.2
13	0.2	0.2
14	0.2	0.2
15	0.2	0.2
16	0.1	0.3
17	0.2	2.8
18	1.9	0.3
19	0.2	2.8
20	0.2	0
21	0	2.8
22	0.2	5.0
23	2.3	0.3
24	0.2	2.8
25	0	0
26	3.0	2.7
27	1.5	1.6
28	0.3	0.3
29	2.0	1.8
30	2.9	0.3
31	0.2	0
32	0.2	2.3
33	2.1	2.1
34	3.0	2.9
35	3.0	2.9
36	0.2	0.2
37	0.2	2.9
38	0.2	2.2
39	1.4	1.5
40	0.2	2.1
41	0.2	2.6
42	0.2	2.0
43	2.2	2.1
44	0.2	0
45	3.1	3.1
46	3.1	3.1
47	5.0	5.0
48	0.2	0.1
49	0.2	3.3
50	5.0	5.0
51	0.2	2.1
52	5.0	5.0
53	2.6	2.6
54	0	0
55	0	2.0
56	0	0
57	2.2	0.1
58	0.2	2.1
59	0.2	5.0
60	0.2	5.0
61	0	4.2
62	2.3	0.2
63	2.2	2.1
64	2.3	2.3
65	2.3	2.3
66	2.3	2.3
67	0.3	0.5
68	1.2	2.4
69	1.9	1.9
70	2.7	1.9
71	0	2.2
72	0.1	0.2
73	4.5	4.5
74	4.5	0.2
75	2.8	2.8
76	2.2	2.2
77	2.8	2.9
78	0	2.3
79	0.2	5.0
80	0	2.5
81	4.9	4.7
82	0	0
83	0	1.8
84	5.0	5.0
85	2.4	2.3
86	2.4	0.2
87	2.4	2.3
88	0	0.3
89	0	2.3
90	0	0.3
91	0	2.3
92	5.0	0.2
93	0.2	0
94	2.5	2.5
95	2.5	2.5
96	2.5	2.5
97	0	0.3
98	2.3	2.6
99	0	0
100	2.6	2.6
IC201		
1	0	0
2	2.7	2.7
3	4.9	4.9
4	0	0
5	3.9	4.2
6	2.5	2.5
7	2.5	2.5
8	5.0	5.0
9	3.3	3.3
10	4.4	4.4
11	4.7	4.7
12	5.0	5.0

MODE PIN NO.	REC	PLAY
13	2.8	2.7
14	2.8	2.7
15	0	0
16	1.2	1.1
17	0	0
18	5.0	5.1
19	2.3	2.0
20	0	0
21	2.3	1.8
22	0.5	0.4
23	5.0	5.0
24	3.0	2.9
25	2.5	2.5
26	5.0	5.0
27	-	4.1
28	3.6	3.6
29	5.0	5.0
30	5.0	5.0
IC501		
1	0.1	2.9
2	0.2	0
3	2.8	5.0
4	0.2	3.1
5	0	0.1
6	0	0.1
7	0.1	2.7
8	0.1	2.4
9	0	4.6
10	0.2	4.5
11	0.1	5.0
12	0.2	0.1
13	0	2.8
14	2.4	2.4
15	0	0
16	2.3	2.3
17	2.7	2.7
18	0.2	2.9
19	0	0
20	0	0
21	0	0
22	0	0
23	0	0
24	0	2.3
25	0	0
26	2.3	2.4
27	2.3	2.4
28	2.3	0
29	2.3	2.4
30	3.6	3.6
31	2.3	2.3
32	2.3	2.4
33	3.4	3.4
34	0	5.0
35	0	0
36	2.4	2.1
37	2.7	2.7
38	2.8	2.8
39	2.8	2.8
40	0	2.9
41	1.5	1.6
42	1.9	2.4
43	2.3	0.1
44	2.4	0
45	0.1	0
46	0.1	0
47	2.3	0.1
48	0.1	0.1
49	2.8	0.1
50	4.3	0.1
51	2.8	2.8
52	2.8	0.1
53	0	0.1
54	0.5	2.7
55	4.3	4.4
56	2.8	2.8
IC2201		
1	2.4	2.4
2	0	0
3	2.4	0
4	0.2	0
5	0	0
6	2.5	2.5
7	2.0	0
8	0	0
9	0	0
10	0	0
11	0	0
12	2.0	2.0
13	0	0
14	0	0
15	0	0
16	2.5	2.5
17	0.5	0.6
18	2.5	2.5
19	2.5	0
20	2.5	1.5
21	2.5	0
22	2.6	0.7
23	0	0
24	0	0.7
25	5.0	5.0
26	2.6	0
27	0	2.4
28	4.3	2.4
29	4.0	1.8
30	3.8	0
31	0.2	2.0
32	2.5	2.5
33	2.5	2.5
34	0.5	0.7
35	2.5	2.5
36	0	0
37	1.7	1.7
38	0	0

MODE PIN NO.	REC	PLAY
39	0	0
40	5.0	5.0
41	0	0
42	4.6	4.5
43	0.2	4.5
44	0.2	3.2
45	0	0
46	4.9	4.9
47	2.5	2.5
48	2.5	2.5
49	0.3	0.3
50	0.5	0.5
51	0	0
52	0	0
53	4.5	4.5
54	0	0
55	0.2	0
56	0	0
57	0.2	4.5
58	10.6	10.7
59	4.6	4.6
60	0	0
61	0.1	2.5
62	2.4	2.4
63	4.6	4.5
64	4.8	4.5
IC3001		
1	2.7	0.1
2	0.2	0.1
3	0.2	0.1
4	0.2	0.1
5	0.3	0.2
6	0.2	0.1
7	0.2	2.4
8	2.5	0
9	0.2	0.1
10	0.2	0.1
11	0	0
12	0.3	0.1
13	0.2	0
14	0.2	0
15	4.7	0
16	0.2	0
17	0.1	0.1
18	0.2	0.1
19	4.8	4.8
20	0.3	2.4
21	4.5	0.1
22	4.2	0
23	0.2	0.1
24	0	4.8
25	0	0.1
26	0.2	0.1
27	0.2	0.1
28	0.2	0
29	4.8	4.8
30	0	0
31	4.9	4.9
32	0.6	0.6
33	0	0
34	0	0
35	2.5	2.5
36	4.8	4.8
37	0	0
38	0	3.9
39	0	0
40	0	0
41	4.8	4.8
42	4.8	4.8
43	0	0
44	0	0
45	4.9	4.9
46	4.7	4.7
47	0	0.1
48	4.4	4.4
49	4.5	4.5
50	4.5	4.5
51	2.9	2.8
52	4.7	4.7
53	4.5	4.5
54	0	-
55	-	-
56	4.6	4.6
57	0	0
58	4.8	4.9
59	4.1	4.1
60	0.3	0.3
61	0	0
62	0	0
63	0	0
64	1.4	1.5
65	0.7	0.8
66	4.9	4.9
67	2.4	2.4
68	0	0
69	2.4	2.4
70	0	4.8
71	4.9	4.9
72	0	5.0
73	0	4.7
74	4.8	0
75	4.4	4.9
76	4.5	4.9
77	0	0
78	0	0
79	4.8	0
80	3.5	4.6
81	0	0
82	4.9	4.9
83	0	0
84	0	0
85	0	0
86	4.6	4.6
87	0	0

MODE PIN NO.	REC	PLAY
88	4.7	0
89	0	0
90	4.8	0
91	0	0
92	0	0
93	0	0
94	0	0
95	0	0
96	0	4.9
97	0	0
98	0	0.3
99	0	2.4
100	2.3	2.4
101	2.5	2.6
102	2.5	2.6
103	4.9	4.9
104	0	0
105	4.9	0
106	0	0
107	0	4.9
108	1.4	1.4
109	4.9	4.9
110	0	0
111	0	0
112	2.4	2.5
IC3002		
1	4.8	4.9
2	4.8	4.9
3	0	0.2
4	0	0
IC3003		
1	0	0
2	0	0
3	0	0
4	0	0
5	4.5	4.9
6	4.5	4.9
7	0	0
8	4.9	4.9
IC6701		
1	4.2	4.3
2	1.5	1.5
3	0.3	1.5
4	0	0
5	2.0	2.0
6	2.0	2.0
7	0.3	0.3
8	0	0
9	0.2	0.1
10	5.0	5.1
11	5.0	5.1
12	4.4	4.9
13	0.3	4.9
14	0.5	0.3
15	0.4	0.4
16	0.4	0.4
17	0.6	0.4
18	0.4	0.5
19	5.0	5.0
20	0	0
21	0.5	0.4
22	4.3	4.3
23	0.2	0.2
24	0.2	0.3
25	0	0
26	0	0
27	0	0
28	0.2	0.3
29	0	0
30	2.3	2.4
31	2.4	2.4
32	0.2	0.3
33	4.7	4.7
34	3.8	3.8
35	0	0
36	2.4	2.4
37	0.2	0.3
38	0.2	0.1
39	0.2	0.3
40	2.3	2.4
41	2.4	2.4
42	2.6	0.3
43	2.3	2.4
44	0	0
IC7102		
1	0	0
2	1.2	1.2
3	5.0	5.0
4	2.1	2.2
5	0	0
6	1.9	1.9
IC8001		
1	0	0
2	1.2	0.1
3	1.2	1.2
4	-7.5	-7.5
5	1.2	1.2
6	1.2	1.2
7	0	0
8	10.0	10.0
Q1		
E	0	0
C	0	0
B	4.3	4.3
Q7		
E	2.4	2.3
C	2.4	2.3
B	0	0
Q8		
E	2.4	2.3
C	2.4	2.3
B	0	0
Q9		
E	0	0

MODE PIN NO.	REC	PLAY
C	0	0
B	0.7	0.7
Q10		
E	0	0
C	0	0
B	0.7	0.7
Q207		
E	3.0	3.0
C	0	0
B	2.3	2.4
Q501		
E	3.6	3.0
C	0	0
B	3.0	2.4
Q2001		
E	-12.9	0
C	0	0
B	-20.8	0.7
Q2002		
E	-12.7	0
C	0	0
B	-20.7	0.7
Q2003		
E	5.1	5.1
C	-20.7	5.0
B	4.9	0
Q2051		
E	0	0
C	7.9	0.2
B	0.4	0.2
Q2052		
E	10.7	10.7
C	10.3	0
B	9.9	10.6
Q2053		
E	0	0
C	0	10.6
B	4.9	0
Q2054		
E	10.3	0.3
C	9.9	0.2
B	9.5	0
Q2055		
E	0	0
C	0	0
B	4.8	0
Q2201		
E	5.6	5.6
C	5.5	0
B	0	5.6
Q2202		
E	0	0
C	0	5.6
B	4.8	0
Q2203		
E	0	0
C	0	0
B	0.7	0
Q2204		
E	0	0
C	0	0
B	0.7	0
Q2251		
E	0	0
C	4.2	4.2
B	0	0
Q2252		
E	0	0
C	4.2	4.2
B	0	0
Q2253		
E	0	0
C	0	0
B	4.2	4.2
Q2254		
E	0	0
C	0	0
B	0	0
Q2255		
E	0	0
C	0	0
B	4.8	0
Q3002		
1	4.7	4.7
2	0	0
Q3003		
1	4.4	4.4
2	0	0
Q3004		
E	0	0
C	0	0
B	0.7	0.7
Q3005		
E	4.9	4.9
C	5.6	5.6
B	5.6	5.5
Q3007		
E	0	0
C	4.6	4.7
B	0	0
Q3008		
E	0	0
C	0	0
B	0	0
Q3401		
E	3.1	3.0
C	5.6	5.6
B	3.7	3.7
Q4001		
E	0	0
C	0	0
B	4.8	4.7
Q5301		
E	-16.7	-16.6

MODE PIN NO.	REC	PLAY
C	-16.6	-16.6
B	-15.9	-15.9
Q5302		
E	5.6	5.6
C	5.4	5.5
B	0.5	0.5
Q5303		
E	0	0
C	0	0
B	4.4	4.4
Q5306		
E	10.6	10.6
C	11.7	11.7
B	11.3	11.3
Q5307		
E	47.2	47.0
C	47.2	47.0
B	0	0
Q5308		
E	31.3	31.3
C	31.2	31.3
B	30.6	30.6
Q5309		
E	0	0
C	0	0
B	4.8	4.8
Q5312		
E	5.6	5.6
C	5.5	5.5
B	0.5	0.5
Q5313		
E	-8.2	-8.2
C	-8.2	-8.1
B	-7.5	-7.4
Q5314		
E	5.1	5.1
C	5.6	5.6
B	5.8	5.8
Q5316		
E	4.9	5.0
C	5.6	5.6
B	5.6	5.6
Q6030		
E	4.9	0.7
C	0	0
B	4.3	0
Q6031		
E	0	0
C	4.3	0
B	0	4.7
Q6032		
E	0	0
C	0	0
B	0	4.7
Q8001		
E	0	0
C	0	0
B	-0.1	-0.1
Q8002		
E	0	0
C	0	0
B	-0.2	-0.1
Q8052		
E	0	0
C	4.9	5.0
B	0	0
Q8053		
E	4.9	4.9
C	-0.1	-0.1
B	4.9	4.9
TU6001		
26	4.9	4.9
27	0	0
28	4.4	4.4
29	4.9	4.9
30	4.4	4.4
31	2.9	2.9
32	31.2	31.2
33	4.5	4.5
34	0	0
35	0	0
36	4.4	4.9
37	4.5	4.9
39	4.9	4.9
40	0	0
41	31.2	31.2
42	0	0
43	0	0
44	4.1	4.1
45	0.1	0.3
46	3.1	3.1
47	0	0
48	2.4	2.5
49	4.3	1.7
CN1		
1	0	0
2	0	0
3	0	0
4	2.4	2.3
5	2.4	2.2
6	2.4	2.2
7	2.6	0
8	2.5	0
9	2.5	0
CN2001		
1	0	0
2	0	0
3	0	0
4	0	0
5	2.1	2.4
6	2.4	2.5
CN2002		
1	0	0
2	0	0

MODE PIN NO.	REC	PLAY
CN3001		
1	2.5	2.5
2	11.7	11.7
3	5.0	5.0
4	0	0
5	9.9	10.0
6	0	0
7	0	0
8	11.7	11.7
9	2.5	2.5
10	2.5	2.5
11	1.3	1.3
12	2.5	2.5
CN3102		
1	-27.9	-27.9
2	4.9	4.9
3	4.8	4.8
4	0	0
5	0	0
6	4.8	4.8
7	4.8	4.9
8	4.7	4.9
9	0	0
10	2.8	2.9
11	3.0	3.0
12	2.2	2.9
13	0	0
14	0	0
CN3103		
1	0	0
2	0	0
3	0	0
4	3.2	3.2
5	0	0
6	3.1	3.0
7	3.2	3.2
8	3.0	3.0
9	3.0	3.0
10	0	0
11	0	0
12	3.1	3.1
13	-16.7	-16.7
14	-21.4	-21.4
CN5311		
1	47.2	47.0
2	5.6	5.6
3	0	0
4	0	0
5	3.3	3.2
6	3.0	3.0
7	3.2	3.2
8	3.0	3.0
9	3.0	3.0
10	3.2	3.2
11	0	0
CN5313		
1	-16.6	-16.5
2	-21.5	-21.4
3	-28.0	-27.9
4	0	0
5	0	0
6	10.6	10.6
7	5.1	5.1
8	0.2	0
9	0	0
10	0	0
11	11.7	11.7
CN7101		
1	0	0
2	0	0
3	0	0
4	0	0
5	0	0
6	0	0
7	0	0
8	0	0
9	0	0
10	0	0
11	0	0
12	0	0
13	0	0
14	0	0
15	0	0
16	0	4.9
CN7102		
1	4.7	4.7
2	10.7	10.6
3	10.7	10.6
4	4.4	4.8
5	4.5	4.9
6	4.9	4.9
7	2.9	2.9
8	0	0
9	4.9	0.7
10	0	0
11	2.8	2.9
12	0	0
13	2.7	1.8
14	0	0
CN7103		
1	0	0
2	0	0
3	2.5	2.4
4	2.1	2.3
5	0	0
6	0.4	0.4
7	0	0
8	0.4	0.4
9	0.5	0.5
10	0.4	0.4
11	5.0	5.0
12	0	0
CN7104		
1	0	0

MODE PIN NO.	REC	PLAY
2	0	0
3	0	0
4	0	0
5	0	0
6	0	0
7	0	0
8	0	0
9	0	0
10	0	0
11	0	0
CN7301		
1	2.4	2.3
2	0.4	0.4
3	2.3	2.4
4	0.4	0.5
5	0	0
6	0.5	0.7
7	2.4	2.4
8	0.3	0.4
9	2.4	2.4
10	0	0
11	0	0
12	0	0
13	0	0
14	0	0
15	0.2	0.1
16	0	0
17	0	0
18	0	0
19	3.2	3.2
20	0	0
21	1.6	1.6
22	0	0

<DISPLAY>

MODE PIN NO.	REC	PLAY
IC7001		
1	2.9	2.8
2	0	0
3	2.8	2.8
4	0	0
5	0	0
6	0	0
7	0	0
8	3.0	3.0
9	1.4	1.4
10	1.4	1.4
11	0	0
12	0	0
13	3.0	3.0
14	0	0
15	0	0
16	0	0
17	0	0
18	0	0
19	0	0
20	0	0
21	0	0
22	0	0
23	0	0
24	3.0	3.0
25	0	0
26	3.0	3.0
27	0	0
28	0	0
29	2.6	2.6
30	0	0
31	0	0
32	0	0
33	0	0
34	0	0
35	0	0
36	2.1	2.1
37	3.2	3.2
38	0	0
39	3.0	0
40	0	0
41	3.2	0
42	3.0	3.0
43	0	0
44	3.0	3.0
45	0	0
46	0	0
47	0	0
48	0	0
49	0	0
50	0	0
51	2.6	2.6
52	-26.0	-25.9
53	-25.6	-25.5
54	-25.6	-25.5
55	-25.8	-25.7
56	-25.8	-25.7
57	-25.8	-25.7
58	-25.8	-25.7
59	-25.8	-25.7
60	-25.8	-25.7
61	-25.8	-25.7
62	-25.8	-25.7
63	-25.8	-25.7
64	-25.8	-25.7
65	-27.6	-25.8
66	-27.6	-27.6
67	-27.6	-27.6
68	-27.6	-27.6
69	-27.7	-27.6
70	-27.7	-27.6
71	-27.6	-27.6
72	-27.6	-27.6
73	0	0
74	0	0
75	0	0
76	0	0
77	-	-

MODE PIN NO.	REC	PLAY
78	-27.6	-27.6
79	-27.6	-27.6
80	-27.6	-27.6
81	-	-
82	-10.8	-
83	-10.8	-20.4
84	-	-
85	-22.6	-22.6
86	-27.6	-27.6
87	-27.6	-25.1
88	-25.2	-25.1
89	-	-
90	-	-
91	-	-
92	0	0
93	0	0
94	0	0
95	0	0
96	0	0
97	0	0
98	0	0
99	0	0
100	-27.9	-27.8
IC7002		
1	4.8	4.8
2	4.8	4.8
3	0	0
IC7003		
1	4.8	4.8
2	4.8	4.8
3	4.8	4.8
4	2.9	2.9
5	4.8	4.8
6	4.6	4.7
7	0	0
8	4.8	4.8
9	4.8	0
10	4.8	4.8
11	4.8	4.8
12	4.8	4.8
13	4.8	4.8
14	4.8	4.8
Q7003		
E	0	0
C	0	0
B	2.6	2.5
Q7004		
E	0	0
C	0	0
B	2.5	2.5
CN7003		
1	0	0
2	0	0
3	2.2	2.9
4	3.0	3.0
5	2.8	2.9
6	0	0
7	4.7	4.9
8	4.8	4.9
9	4.8	4.8
10	0	0
11	0	0
12	4.8	4.8
13	4.9	4.9
14	-27.9	-27.9
CN7004		
1	-21.4	-21.4
2	-16.7	-16.7
3	3.1	3.0
4	0	0
5	0	0
6	3.0	3.0
7	3.0	3.0
8	3.2	3.2
9	3.1	3.0
10	0	0
11	3.2	3.2
12	0	0
13	0	0
14	0	0

<JACK>

MODE PIN NO.	REC	PLAY
CN7191		
1	0	0
2	0	0
3	0	0
4	0	0
5	0	0
6	0	0
7	0	0
8	0	0
9	0	0
10	0	0
11	0	0

<2D DIGITAL>

MODE PIN NO.	REC	PLAY
IC1201		
1	0.9	0.9
2	0	0
3	3.3	3.2
4	0	1.6
5	1.4	0
6	0	0
7	3.2	3.2
8	0.6	0.6
9	2.5	2.5
10	1.6	1.5
11	0	0
12	3.2	3.2
13	0	0
14	0	0
15	0	0
16	0	0
17	0	0
18	3.3	3.3
19	1.7	1.7
20	0	0
21	0	0
22	0	0
23	0	0
24	0	0
25	0	0
26	0	0
27	0	0
28	3.3	3.3
29	0	0
30	1.0	1.0
31	1.5	1.4
32	1.0	1.0
33	0	0
34	4.5	0
35	4.5	0
36	0	3.3
37	0	4.1
38	0	0
39	3.3	0
40	0.9	0.9
41	0.3	0.5
42	0	0
43	1.8	1.7
44	0.3	0.1
Q1201		
E	3.5	3.5
C	4.8	4.8
B	4.2	4.2
Q1202		
E	1.2	1.2
C	0	0
B	0.5	0.5
Q1203		
E	0	0.8
C	0	0
B	0.4	0.1
Q1204		
E	0	2.0
C	4.8	4.7
B	0.5	0
Q1205		
E	1.4	1.0
C	4.8	4.7
B	2.0	1.6
CN1201		
1	2.2	2.1
2	0	0
3	0.5	2.7
4	5.0	5.0
5	3.0	2.5
6	0	4.9
7	3.3	3.0
8	0	0
9	2.8	2.8
10	0	4.2
11	4.5	4.5
12	4.5	4.5

<TERMINAL I/O>

MODE PIN NO.	REC	PLAY
IC901		
1	2.4	2.4
2	0	0
3	2.1	2.1
4	0	0
5	2.4	2.4
6	0	0.8
7	2.9	2.9
8	0	0
9	2.4	2.4
10	0	0
11	0	0
12	2.9	2.9
13	3.8	3.8
14	3.9	3.9
15	2.3	2.3
16	5.0	5.0
17	2.3	2.3
18	5.0	0
19	0	2.4
20	0	0
21	2.4	2.4
22	0	2.9
23	4.1	4.1
24	0	1.7
25	0	0
26	2.2	2.2
27	0	0
28	0	1.8
29	2.2	2.2
30	5.0	5.0
31	2.0	2.0
32	0	0
33	0	2.3
34	0	4.1
35	2.6	2.6
36	2.8	2.8
37	2.2	2.2
38	8.9	8.9
39	2.2	2.2
40	2.2	2.2
41	4.4	4.4
42	4.4	4.4
43	4.4	4.4
44	4.5	4.5
45	4.4	4.4
46	4.4	4.5
47	4.5	4.5
48	4.4	4.4
49	4.4	4.4
50	0	0
51	2.2	2.2
52	1.8	1.8
53	1.8	1.8
54	0	0
55	1.5	1.5
56	1.5	1.5
IC902		
1	0	0
2	1.5	0
3	1.5	0
4	2.4	2.4
5	5.0	5.0
6	2.4	2.4
7	1.5	1.5
8	1.5	1.5
IC903		
1	0	0
2	2.4	2.4
3	1.5	0
4	1.5	1.5
5	5.0	5.0
6	1.5	1.5
7	1.5	0
8	2.4	0
Q901		
E	0	0
C	10.5	10.5
B	0	0
Q902		
E	10.0	9.9
C	10.5	10.5
B	10.5	10.5
Q903		
E	0	0
C	10.5	10.4
B	0	0
Q904		
E	0	0
C	0	0
B	0	4.1
Q907		
E	0	-0.1
C	-0.2	-0.1
B	0	0
Q908		
E	0	2.9
C	-0.2	-0.1
B	4.1	4.1
Q912		
E	3.1	3.1
C	0	0
B	2.4	2.4
Q913		
E	3.6	3.6
C	0	0
B	2.9	2.9
Q917		
E	0	0
C	0	0
B	-0.1	-0.1

MODE PIN NO.	REC	PLAY
Q918		
E	0	0
C	0	0
B	-0.1	-0.1
Q919		
E	4.9	4.9
C	-0.1	0
B	4.9	0
Q932		
E	2.4	2.4
C	0	0
B	3.1	3.1
Q933		
E	2.4	2.4
C	0	0
B	1.7	1.7
CN913		
1	4.7	4.7
2	10.7	10.6
3	10.7	10.6
4	4.4	4.8
5	4.5	4.9
6	4.9	4.9
7	2.9	2.9
8	0	0
9	4.9	0.7
10	0	0
11	2.8	2.9
12	0	0
13	2.7	1.8
14	0	0
CN914		
1	0	0
2	0	0
3	0	0
4	0	0
5	0	0
6	0	0
7	0	0
8	0	0
9	0	0
10	0	0
11	0	0
12	0	0
13	0	0
14	0	0
15	0	0
16	0	4.9
CN915		
1	0	0
2	0	0
3	2.5	2.4
4	2.1	2.3
5	0	0
6	0.4	0.4
7	0	0
8	0.4	0.4
9	0.5	0.5
10	0.4	0.4
11	5.0	5.0
12	0	0

<DVD>

MODE PIN NO.	DC (V)
IC101	
1	0
2	4.4
3	3.7
4	4.4
5	0
6	1.7
7	1.7
8	1.9
9	3.3
10	0
11	3.3
12	3.3
13	3.3
14	3.3
15	0
16	1.7
17	1.5
18	1.7
19	1.7
20	0
21	1.7
22	0
23	1.7
24	0.9
25	1.7
26	0
27	0
28	4.9
29	1.7
30	0
31	0
32	0
33	0
34	0
35	0.9
36	3.3
37	1.3
38	0.9
39	3.3
40	3.3
41	1.7
42	1.7
43	1.7
44	1.0
45	1.7
46	2.1
47	2.1
48	2.1
49	2.1
50	2.1
51	2.1
52	2.1
53	2.1
54	2.1
55	4.9
56	2.1
57	2.1
58	2.1
59	2.1
60	2.1
61	0
62	2.1
63	2.1
64	1.6
IC201	
1	1.7
2	1.7
3	1.7
4	1.7
5	1.7
6	1.7
7	1.7
8	0
9	3.2
10	5.0
11	2.5
12	2.5
13	2.5
14	2.5
15	4.3
16	4.3
17	4.3
18	4.3
19	9.2
20	0
21	0
22	1.7
23	1.7
24	1.7
25	0
26	0
27	1.7
28	9.2
29	1.7
30	9.2

MODE PIN NO.	DC (V)
IC251	
1	0.8
2	0.8
3	0.8
4	0.8
5	0
6	0
7	0.8
8	0
9	5.0
10	5.0
11	5.0
12	5.0
13	5.0
14	5.0
15	0
16	0
17	0
18	0
19	5.0
20	5.0
21	1.67
22	1.67
23	0
24	3.3
25	5.0
26	0
27	9.2
28	9.2
29	0
30	0
IC301	
1	0
2	2.9
3	3.3
4	0
5	3.3
6	3.3
7	2.7
8	0
9	0
10	0
11	3.3
12	3.3
13	3.3
14	0
15	1.4
16	0.3
17	1.4
18	1.7
19	0
20	1.9
21	0
22	2.2
23	2.2
24	1.7
25	1.5
26	1.5
27	1.5
28	1.5
29	1.5
30	0.5
31	3.3
32	0
33	3.3
34	3.3
35	3.3
36	3.3
37	0
38	0
39	0
40	0
41	0
42	0
43	1.0
44	0
45	1.5
46	0
47	3.3
48	0
49	3.1
50	3.1
51	3.3
52	3.3
53	0.9
54	1.0
55	3.1
56	3.1
57	3.3
58	1.9
59	0
60	0
61	0.8
62	0.8
63	0.7
64	1.6

MODE PIN NO.	DC (V)
65	1.7
66	1.7
67	1.7
68	1.7
69	3.3
70	3.1
71	1.0
72	3.1
73	1.0
74	3.1
75	1.0
76	1.7
77	0
78	3.3
79	1.7
80	0
81	0
82	0.8
83	2.1
84	1.7
85	0
86	1.4
87	1.4
88	3.3
89	0
90	1.6
91	1.6
92	1.2
93	1.6
94	0
95	0.7
96	1.6
97	1.7
98	1.6
99	3.3
100	0.7
101	0.7
102	0
103	1.4
104	2.1
105	2.1
106	1.7
107	0.7
108	0.7
109	3.3
110	1.7
111	1.7
112	0
113	0
114	1.7
115	1.7
116	3.3
117	1.7
118	1.7
119	1.7
120	1.7
121	2.1
122	1.7
123	2.1
124	1.0
125	3.3
126	0
127	0
128	0
129	0
130	0
131	2.5
132	0
133	0
134	0
135	0
136	1.7
137	3.3
138	0
139	3.3
140	0
141	0
142	0
143	3.3
144	0
145	
146	1.7
147	3.3
148	
149	0
150	0
151	0
152	1.7
153	0
154	1.7
155	0
156	3.3
157	0
158	0
159	0
160	0

MODE PIN NO.	DC (V)
161	0
162	3.3
163	0
164	0
165	0
166	0
167	0
168	0
169	3.3
170	0
171	0
172	3.3
173	0
174	4.9
175	4.9
176	3.3
IC401	
1	0
2	1.8
3	1.8
4	0
5	3.3
6	3.3
7	0
8	0
9	1.9
10	1.3
11	1.5
12	1.3
13	0
14	0
15	0
16	0
IC402	
1	1.5
2	1.3
3	0.7
4	1.3
5	2.6
6	2.5
7	2.6
8	2.6
9	1.4
10	1.3
11	1.5
12	1.2
13	0
14	1.7
15	1.7
16	1.7
IC501	
1	3.2
2	0.5
3	0.4
4	1.8
5	0.4
6	0
7	0.4
8	0.4
9	0
10	3.2
11	0
12	0
13	0
14	0
15	2.0
16	1.3
17	0
18	0.4
19	3.2
20	1.4
21	1.7
22	1.7
23	0
24	3.2
25	0.5
26	2.5
27	3.2
28	1.2
29	0
30	0
31	0
32	2.0
33	1.3
34	1.7
35	2.2
36	3.1
37	3.2
38	0
39	3.2
40	0
41	0
42	0
43	0.7
44	3.2
45	0.7

MODE PIN NO.	DC (V)
46	0.5
47	0
48	0.5
49	0
50	0.4
51	0.4
52	0.4
53	3.2
54	0.4
55	0.4
56	0.4
57	0
58	0.4
59	0.4
60	0.4
61	0.5
62	3.2
63	0.5
64	3.2
65	1.0
66	1.1
67	0
68	1.5
69	0
70	1.9
71	0
72	0
73	0
74	0
75	3.2
76	1.5
77	1.7
78	1.7
79	1.7
80	0
81	0
82	0
83	0
84	1.2
85	0
86	3.2
87	0
88	1.7
89	0
90	0
91	1.2
92	0
93	0
94	0.6
95	0.7
96	0
97	0
98	1.7
99	0.9
100	0
101	1.7
102	3.2
103	0
104	0
105	0
106	0
107	3.2
108	1.7
109	0
110	0
111	1.0
112	1.0
113	3.1
114	0.4
115	0.4
116	1.3
117	3.1
118	0.8
119	1.3
120	1.8
121	0
122	0
123	0
124	0
125	3.2
126	0
127	0
128	0
129	0
130	0
131	0
132	0
133	0
134	0
135	1.8
136	0
137	0
138	0
139	0
140	3.2
141	0

MODE PIN NO.	DC (V)
142	0
143	0
144	0
145	3.2
146	0
147	0
148	0
149	0
150	0
151	0
152	0
153	0
154	3.2
155	0
156	3.2
157	0
158	0
159	1.7
160	1.7
161	3.2
162	0
163	0
164	0
165	0
166	0
167	0
168	0
169	3.2
170	3.2
171	0
172	0
173	0
174	0
175	0
176	0
177	0
178	0
179	0
180	0
181	3.2
182	3.2
183	0
184	0
185	3.2
186	0
187	0
188	0
189	3.2
190	0
191	0
192	1.7
193	3.2
194	0.6
195	2.9
196	3.2
197	3.2
198	3.2
199	3.2
200	3.2
201	0
202	3.2
203	3.2
204	0
205	3.4
206	3.2
207	3.2
208	3.3
209	3.3
210	3.2
211	3.3
212	1.7
213	3.2
214	3.2
215	0
216	0
217	3.2
218	0
219	3.2
220	3.2
221	0
222	3.2
223	3.2
224	3.2
225	0
226	0
227	0.8
228	0
229	0.8
230	0
231	0.8
232	0.6
233	3.2
234	0.6
235	0.8
236	1.0
237	0

MODE PIN NO.	DC (V)
238	0.4
239	0.8
240	0.8
IC505	
1	3.2
2	0.8
3	3.2
4	0.8
5	0.8
6	0
7	0.6
8	0.6
9	3.2
10	0.8
11	1.0
12	0
13	0.4
14	0
15	3.2
16	0
17	3.2
18	0
19	3.2
20	2.2
21	0
22	2.0
23	1.3
24	0
25	1.2
26	2.5
27	0.5
28	1.0
29	3.2
30	0
31	0.4
32	0
33	0.4
34	0.4
35	3.2
36	0.4
37	0.4
38	0
39	0.5
40	0.5
41	3.2
42	3.2
43	3.2
44	0
45	0.4
46	0
47	0.4
48	0.4
49	3.2
50	0.4
51	0.5
52	0
53	0.5
54	0.7
55	3.2
56	0.7
57	0.6
58	0
59	0
60	1.7
61	1.4
62	0.4
63	1.3
64	1.3
65	2.0
66	0
67	3.2
68	1.7
69	0
70	0
71	0
72	0
73	0
74	0
75	3.2
76	0.4
77	0.4
78	0
79	0
80	0.4
81	3.2
82	0.5
83	0.8
84	0
85	0.8
86	0
IC509	
1	0
2	0
3	0
4	0
5	0

MODE PIN NO.	DC (V)
6	0
7	0
8	0
9	0
10	0
11	3.2
12	0
13	0
14	0
15	0
16	0
17	0
18	0
19	0
20	0
21	0
22	0
23	0
24	3.2
25	0
26	3.2
27	0
28	3.2
29	0
30	0
31	0
32	0
33	0
34	0
35	0
36	0
37	3.2
38	0
39	0
40	0
41	0
42	0
43	0
44	0
45	0
46	0
47	0
48	0
IC511	
1	0
2	1.8
3	3.2
IC512	
1	0
2	0
3	0
4	0
5	0
6	0
7	0
8	0
9	0
10	0
11	0
12	0
13	0
14	0
15	0
16	0
17	0
18	0
19	0
20	3.2
IC513	
1	0
2	0
3	0
4	0
5	0
6	0
7	0
8	0
9	0
10	0
11	0
12	0
13	0
14	0
15	0
16	0
17	0
18	0
19	0
20	3.2

■ VIDEO BLOCK DIAGRAM(1)

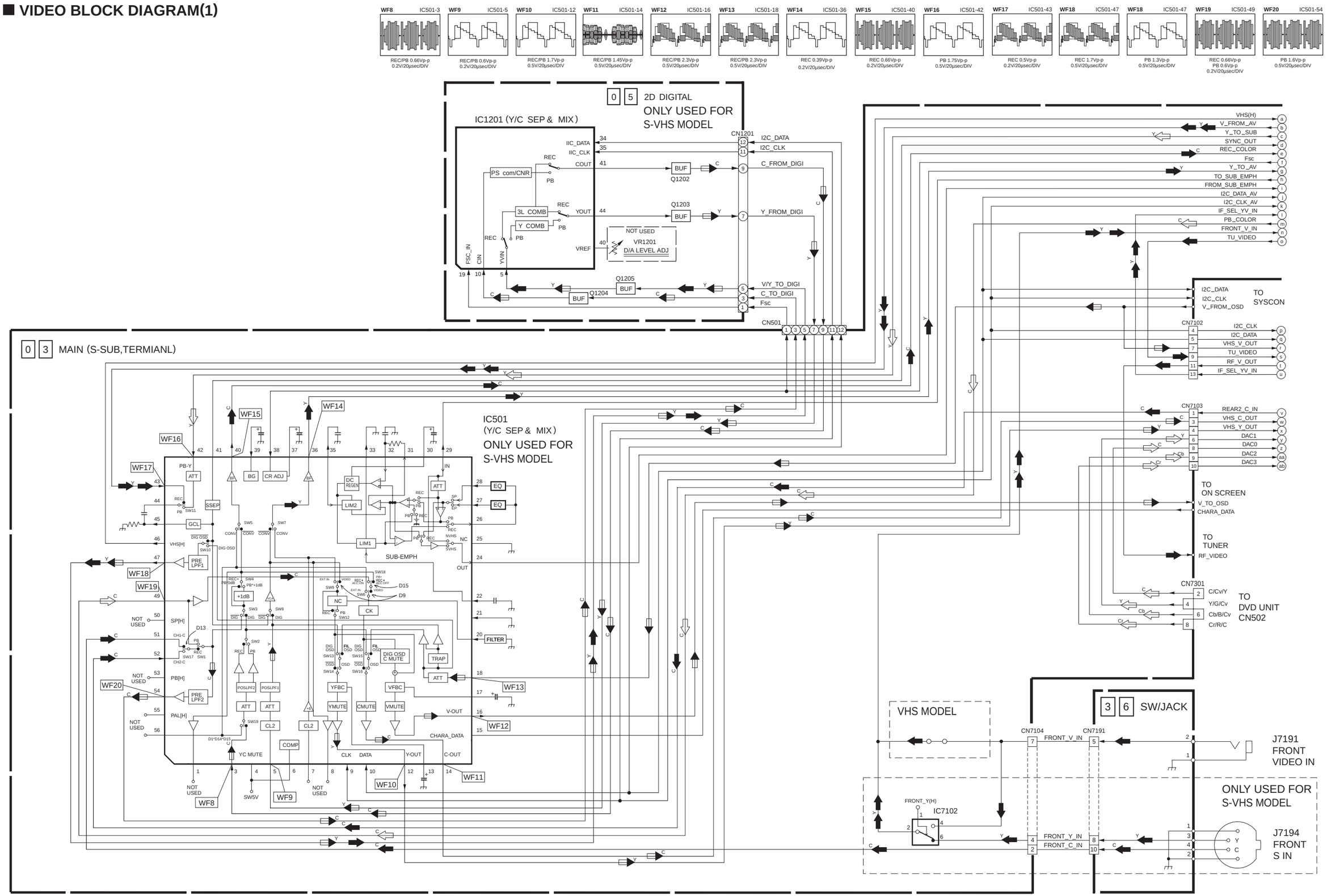

■ VIDEO BLOCK DIAGRAM(2)

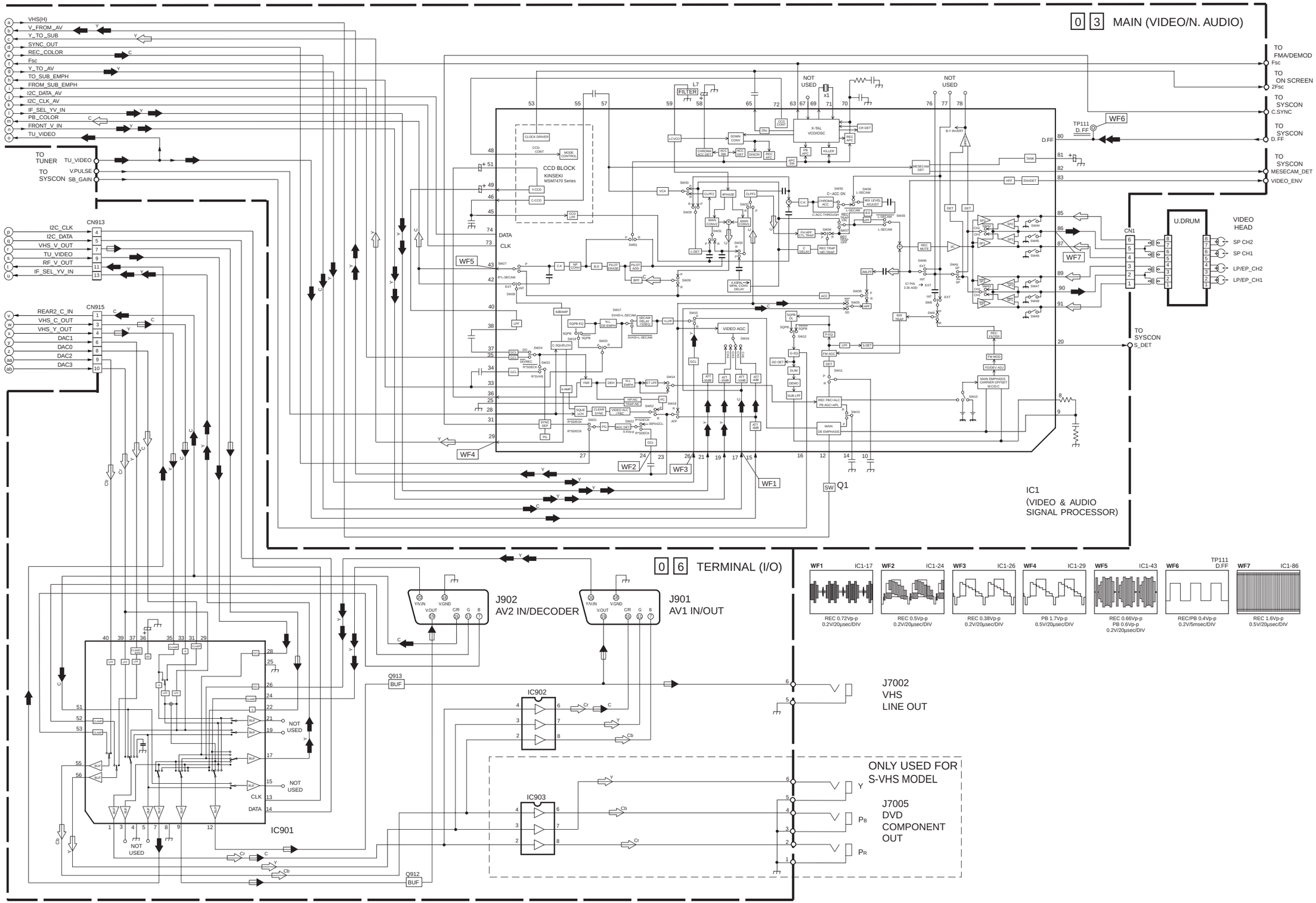

■ AUDIO BLOCK DIAGRAM

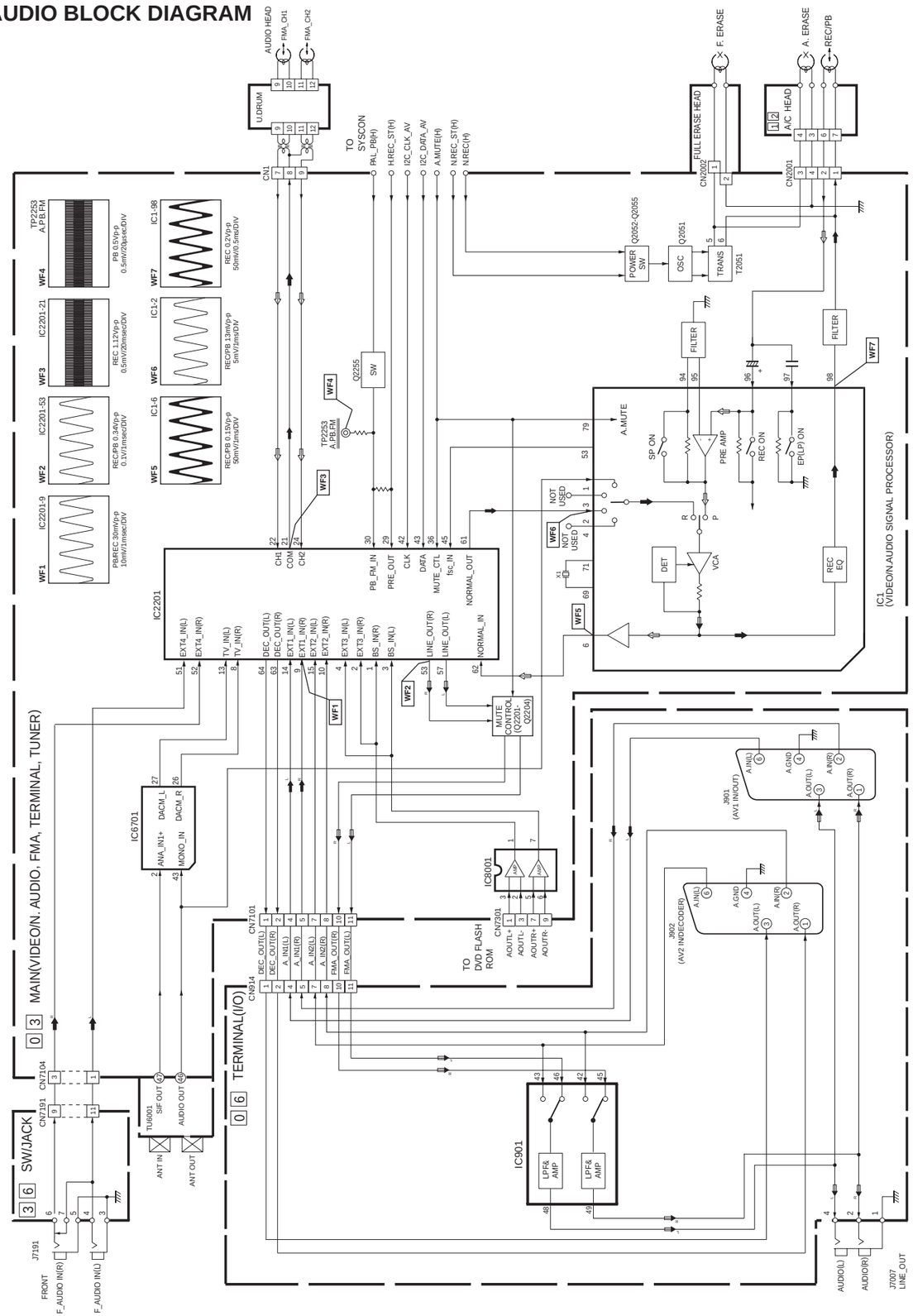

■ SYSTEM CONTROL BLOCK DIAGRAM

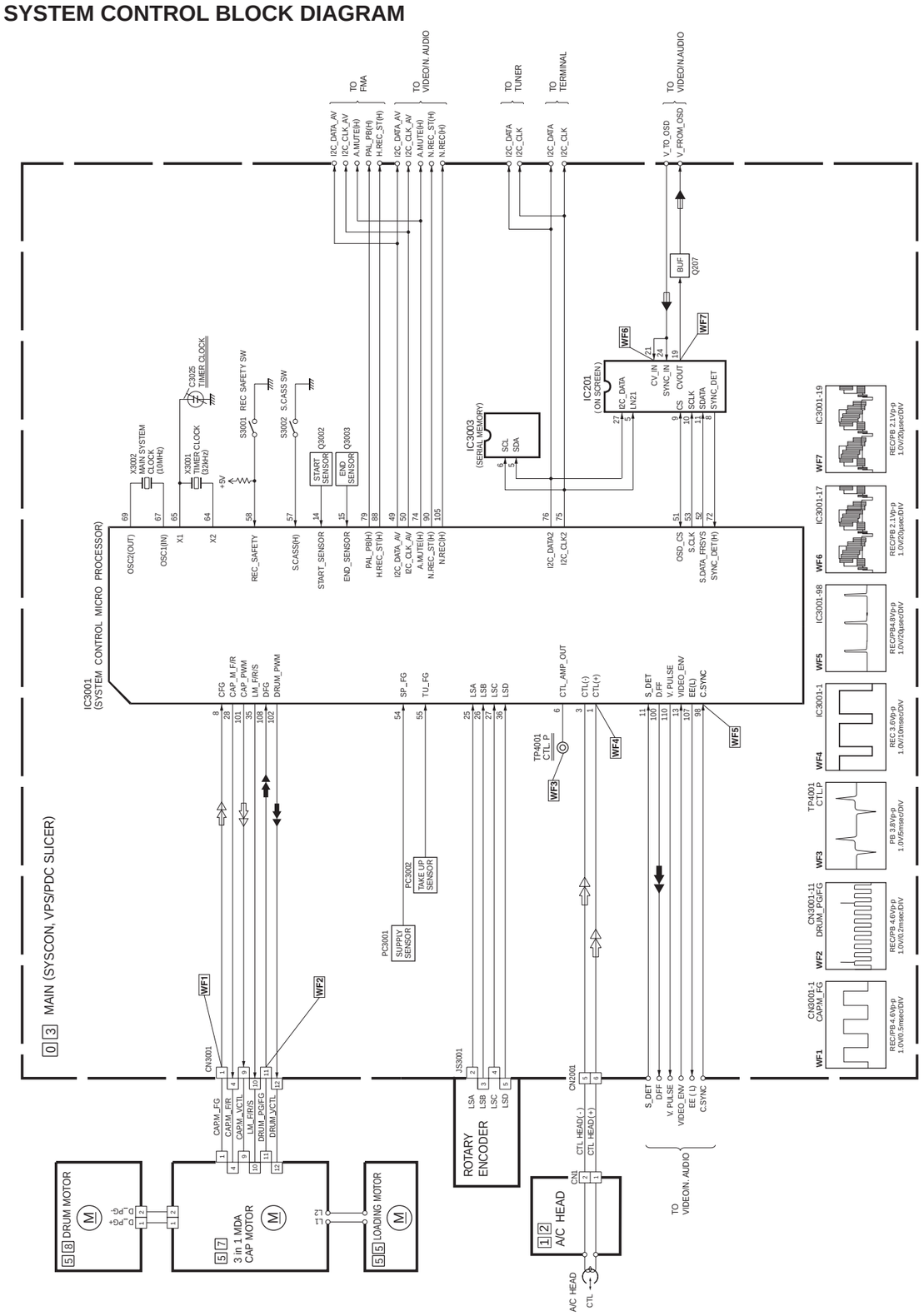

■ CPU PIN FUNCTION

<SYSCON IC3001>

PIN NO.	LABEL	IN/OUT	FUNCTION
1	CTL[+]	-	CTL(+) SIGNAL
2	SVss	-	GND
3	CTL[-]	IN/OUT	CTL(-) SIGNAL
4	CTLBIAS	-	CTL BIAS VOLTAGE
5	CTLFB	IN	CTL PULSE FEEDBACK
6	CTL_AMP_OUT	OUT	CTL PULSE OUTPUT
7	CTLSMTIN	OUT	CTL PULSE OUTPUT
8	CFG	IN	CAPSTAN FG PULSE INPUT
9	SVcc	-	SYSTEM POWER
10	Avcc	IN/OUT	SYSTEM POWER
11	S_DET	IN	DETECTION OF VIDEO SYNC SIGNAL (DETECED:H)
12	SECAM_DET	IN	SECAM MODE DETECT
13	VIDEO_ENV	IN	AUTO TRACKING DTECT/INPUT THE AVERAGE OF PLAYBACK VIDEO SIGNAL
14	START_SENSOR	IN	START SENSOR
15	END_SENSOR	IN	END SENSOR
16	KEY1	IN	OPERATION CONTROL SIGNAL
17	PROTECT	IN	DETECTION SIGNAL FOR SW POWER SUPPLY
18	SCR_ID/	IN	SCRAMBLE CONTROL INPUT (SCRAMBLE:H)
19	KEY2	IN	OPERATION CONTROL SIGNAL
20	AFC	IN	TUNING CHECK
21	RF_AGC	IN	CHANGES IN ATS+IC OUTPUT AS CAUSED BY CHANGES IN RECEIVER SENSITIVITY WHEN THE SAME CHANNEL IS RECEIVED MORE THAN ONCE ARE INPUT.
22	A.ENV/ND[L]	IN	AUDIO PB FM ENV.INPUT/NON HiFi MODE:L
23	Avss	-	GND
24	CTL_GAIN	OUT	CONTROL AMP OUT FREQUENCY RESPONSE SWITCHING
25	LSA	IN	MECHANISM MODE DETECT (A)
26	LSB	IN	MECHANISM MODE DETECT (B)
27	LSC	IN	MECHANISM MODE DETECT (C)
28	CAP.M_F/R	OUT	CAPSTAN MOTOR REVERSE CONTROL (FWD:L/REV:H)
29	RC	IN	REMOTE CONTROL DATA INPUT
30	NC	-	NC
31	P50_IN	IN	CONTROL SIGNAL FOR TV LINK
32	R.PAUSE/COMPU_IN	IN	REMOTE PAUSE INPUT/AV COMPULINK INPUT
33	P50_OUT	OUT	CONTROL SIGNAL FOR TV LINK
34	NC	-	NC
35	LM_F/R/S	OUT	LOADING MOTOR DRIVE
36	LSD	IN	MECHANISM MODE DETECT (D)
37	NC	-	NC
38	SB_GAIN[PWM]	OUT	VOLTAGE CONTROL SIGNAL FOR VIDEO FREQUENCY RESPONSE
39	NC	-	NC
40	POWER_DET	IN	DETECTION SIGNAL FOR POWER DOWN OF AC POWER SUPPLY
41	P.CTL[H]	OUT	CONTROL SIGNAL FOR SWITCHING POWER SUPPLY
42	P.SAVE[L]	OUT	POWER SAVE MODE:H
43	Vss	-	GND
44	COMPU_OUT	OUT	AV COMPULINK OUTPUT
45	Vcc	-	SYSTEM POWER
46	K.BUS_DATA_TO_SYS	IN	SERIAL DATA TRANSFERMER OUTPUT FOR DVD CPU
47	K.BUS_DATA_FR_SYS	OUT	SERIAL DATA TRANSFERMER OUTPUT FOR DVD CPU
48	K.BUS_CLK	OUT	SERIAL DATA TRANSFERMER CLOCK FOR DVD CPU
49	12C_DATA_AV	IN/OUT	SERIAL DATA TRANSFER OUTPUT FOR AD IC
50	12C_CLK_AV	OUT	SERIAL DATA TRANSFER CLOCK FOR AD IC
51	OSD_CS	OUT	ONSCREEN IC CHIP SELECT
52	S.DATA_FR_SYS	OUT	SERIAL DATA TRANSFER OUTPUT FROM THE FDP DRIVER TO THE ON-SCREEN
53	S.CLK	OUT	SERIAL DATA TRANSFERMER CLOCKFOR ONSCREEN IC
54	SP_FG	IN	DETECTION SIGNAL FOR SUPPLY REEL ROTATION/TAPE REMAIN
55	TU_FG	IN	DETECTION SIGNAL TAKE-UP REEL ROTATION/TAPE REMAIN
56	SUB_RESET	OUT	DVD CPU RESET

PIN NO.	LABEL	IN/OUT	FUNCTION
57	S.CASS[H]	IN	S.CASS DETECT
58	REC_SAFETY	IN	REC SAFETY SWITCH DETECT (SW ON:L)
59	SW1/CONV_CTL[H]	OUT	TUNER SYSTEM MODE:H
60	SW2/CH_SW	IN	TUNER SYSTEM MODE:L/CHANNEL SWITCHING SIGNAL
61	NC	-	NC
62	FWE	OUT	FLASH WRITE ENABLE
63	NMI	-	NOT USED
64	X2	-	TIMER CLOCK(32kHz)
65	X1	-	TIMER CLOCK(32kHz)
66	RES	-	RESET TERMINAL(RESET ON:L)
67	OSC1[IN]	-	MAIN SYSTEM CLOCK(10MHz)
68	Vss	-	GND
69	OSC2[OUT]	-	MAIN SYSTEM CLOCK(10MHz)
70	VCC/VCL	-	SYSTEM POWER
71	MODE	-	NOT USED
72	SYNC_DET[H]	IN	DETECTION OF VIDEO SYNC SIGNAL (DETECTED:H)
73	TU_V_MUTE[H]	OUT	TUNER VIDEO CONTROL (MUTE:H)
74	A.MUTE[H]	OUT	AUDIO MUTE CONTROL (MUTE:H)
75	12C_CLK2	OUT	SERIAL DATA TRANSFER CLOCK FOR MEMORY IC
76	12C_DATA2	IN/OUT	SERIAL DATA TRANSFER OUTPUT FOR MEMORY IC
77	SECAM[H]	IN	SECAM MODE:H
78	P.ON_PULSE	OUT	POWER ON /OFF PULSE
79	PAL_PB[H]	OUT	PAL FM (PB ON:H)
80	SUB_REQ[L]	OUT	DVD CPU RESET
81	MESECAM_DET	OUT	MESECAM:H
82	Vcc	-	SYSTEM POWER
83	FRONT_Y[H]	OUT	FRONT S-INPUT:H
84	Vss	-	GND
85	SP_SHORT	OUT	MODE SELECT
86	LP_SHORT	OUT	MODE SELECT
87	NC	-	NC
88	H.REC_ST[H]	OUT	HiFi AUDIO SOUND RECORDING START
89	NC	-	NC
90	N.REC_ST[H]	OUT	NORMAL AUDIO SOUND RECORDING START
91	DVD[H]	OUT	DVD MODE:H
92	NC	-	NC
93	NC	-	NC
94	CTL_A	OUT	AV1 OUTPUT SWITCH CONTROL
95	DVD_RGB[H]	-	NC
96	A.MUTE2[L]	OUT	AUDIO MUTE CONTROL(MUTE ON:H)
97	NC	-	NC
98	C.SYNC	IN	COMPOSITE SYNC INPUT
99	A.FF	OUT	AUDIO FF OUTPUT
100	V.FF	OUT	ROTATION DETECTION SIGNAL FOR DRUM MOTOR/TIMING CONTROL SIGNAL FOR REC
101	CAPPWM	OUT	CAPSTAN MOTOR CONTROL
102	DRUMPWM	IN	DRUM MOTOR CONTROL
103	P.MUTE[L]	OUT	PICTURE MUTE CONTROL(MUTE ON:H)
104	SEP[H]	IN	Y/C SEPARATE INPUT MODE: H
105	N.REC[H]	OUT	NORMAL AUDIO REC MODE CONTROL SIGNAL (REC:H)
106	ET_REC[H]	OUT	S-VHS ET REC MODE:H
107	EE[L]	OUT	EE MODE:L
108	DFG	IN	DRUM FG PULSE INPUT
109	Vcc	-	SYSTEM POWER
110	V.PULSE	OUT	V.PULSE ADDITION TIMING CONTROL
111	Vss	-	GND
112	CTLREF	-	CTL REFERENCE VOLTAGE

■ REMOTE CONTROLLER SCHEMATIC DIAGRAM

NOTE :
1. All parts shown in this schematic are ciritical for sefety.
2. This schematic is only for reference.
   Avoid replacing individual parts.
   Replace the entire unite only.

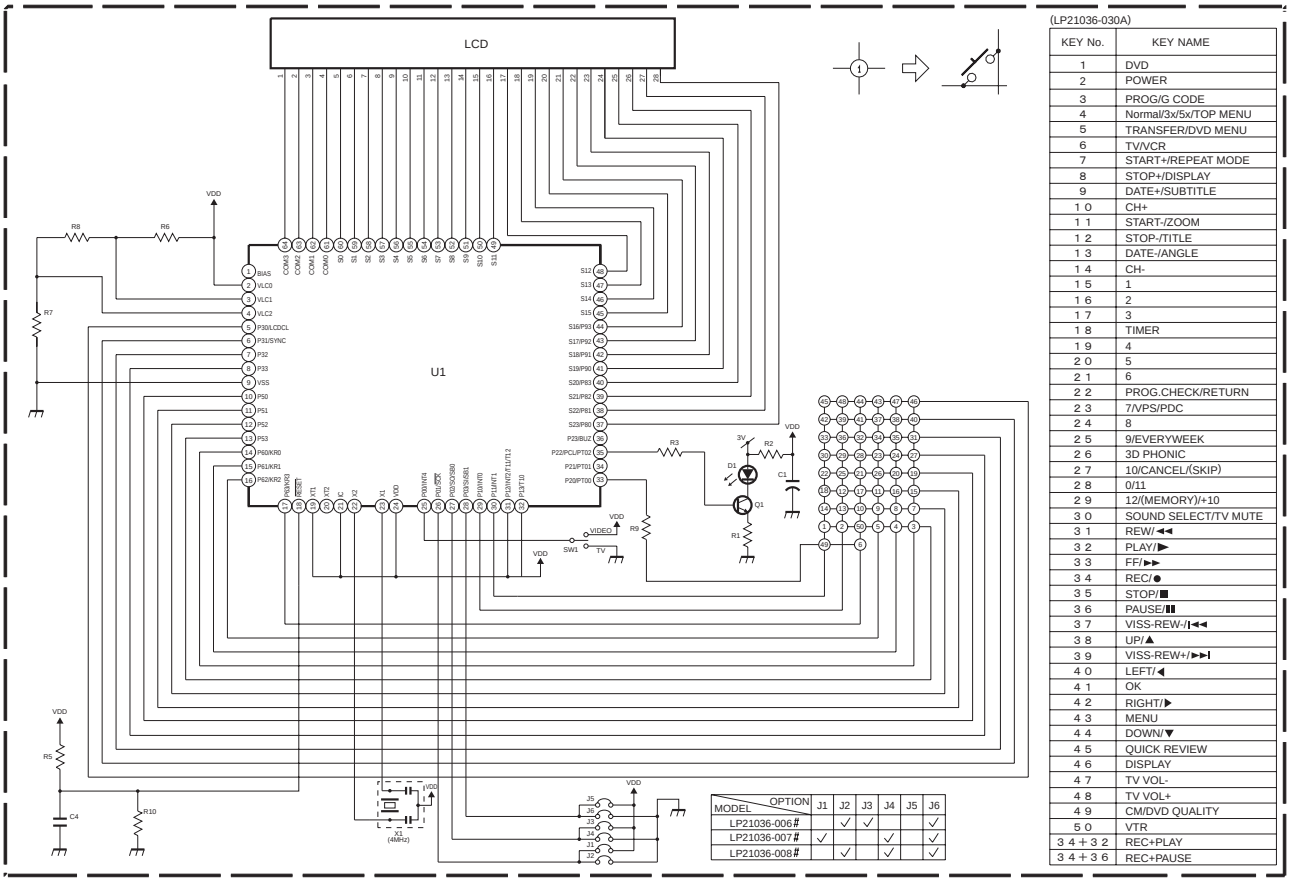

MODEL \ OPTION	J1	J2	J3	J4	J5	J6
LP21036-006#		✓	✓			✓
LP21036-007#	✓			✓		✓
LP21036-008#		✓		✓		✓

(LP21036-030A)

KEY No.	KEY NAME
1	DVD
2	POWER
3	PROG/G CODE
4	Normal/3x/5x/TOP MENU
5	TRANSFER/DVD MENU
6	TV/VCR
7	START+/REPEAT MODE
8	STOP+/DISPLAY
9	DATE+/SUBTITLE
1 0	CH+
1 1	START-/ZOOM
1 2	STOP-/TITLE
1 3	DATE-/ANGLE
1 4	CH-
1 5	1
1 6	2
1 7	3
1 8	TIMER
1 9	4
2 0	5
2 1	6
2 2	PROG.CHECK/RETURN
2 3	7/VPS/PDC
2 4	8
2 5	9/EVERYWEEK
2 6	3D PHONIC
2 7	10/CANCEL/(SKIP)
2 8	0/11
2 9	12/(MEMORY)/+10
3 0	SOUND SELECT/TV MUTE
3 1	REW/◀◀
3 2	PLAY/▶
3 3	FF/▶▶
3 4	REC/●
3 5	STOP/■
3 6	PAUSE/❚❚
3 7	VISS-REW-/❙◀◀
3 8	UP/▲
3 9	VISS-REW+/▶▶❙
4 0	LEFT/◀
4 1	OK
4 2	RIGHT/▶
4 3	MENU
4 4	DOWN/▼
4 5	QUICK REVIEW
4 6	DISPLAY
4 7	TV VOL-
4 8	TV VOL+
4 9	CM/DVD QUALITY
5 0	VTR
3 4 + 3 2	REC+PLAY
3 4 + 3 6	REC+PAUSE

■ FDP GRID ASSIGNMENT AND ANODE CONNECTION

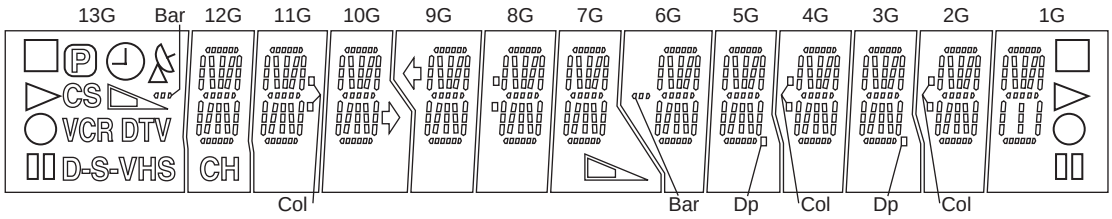

	13G	12G	11G	10G	9G	8G	7G	6G	5G	4G	3G	2G	1G
P1	□	a	a	a	a	a	a	a	a	a	a	a	a
P2	Ⓟ	b	b	b	b	b	b	b	b	b	b	b	b
P3	◷	f	f	f	f	f	f	f	f	f	f	f	f
P4	🔔	h	h	h	h	h	h	h	h	h	h	h	h
P5	▷	j	j	j	j	j	j	j	j	j	j	j	j
P6	CS	k	k	k	k	k	k	k	k	k	k	k	k
P7	Bar	CH	Col	⇨	⇦	Col	◺	Col	Dp	Col	Dp	Col	□
P8	◺	g	g	g	g	g	g	g	g	g	g	g	g
P9	○	m	m	m	m	m	m	m	m	m	m	m	▷
P10	VCR	c	c	c	c	c	c	c	c	c	c	c	c
P11	DTV	e	e	e	e	e	e	e	e	e	e	e	e
P12	❚❚	r	r	r	r	r	r	r	r	r	r	r	○
P13	D-	p	p	p	p	p	p	p	p	p	p	p	p
P14	S-	n	n	n	n	n	n	n	n	n	n	n	❚❚
P15	VHS	d	d	d	d	d	d	d	d	d	d	d	d

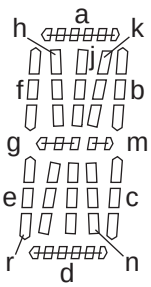

(2G-12G)

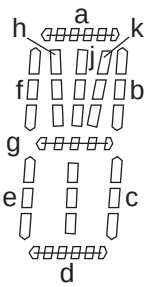

(2G-12G)

PARTS LIST

SAFETY PRECAUTION

Parts identified by the ⚠ symbol are critical for safety. Replace only with specified part numbers.

BEWARE OF BOGUS PARTS

Parts that do not meet specifications may cause trouble in regard to safety and performance. We recommend that genuine JVC parts be used.

1. EXPLODED VIEW

1.1 PACKING AND ACCESSORY ASSEMBLY <M1>

The instruction manual to be provided with this product will differ according to the destination.

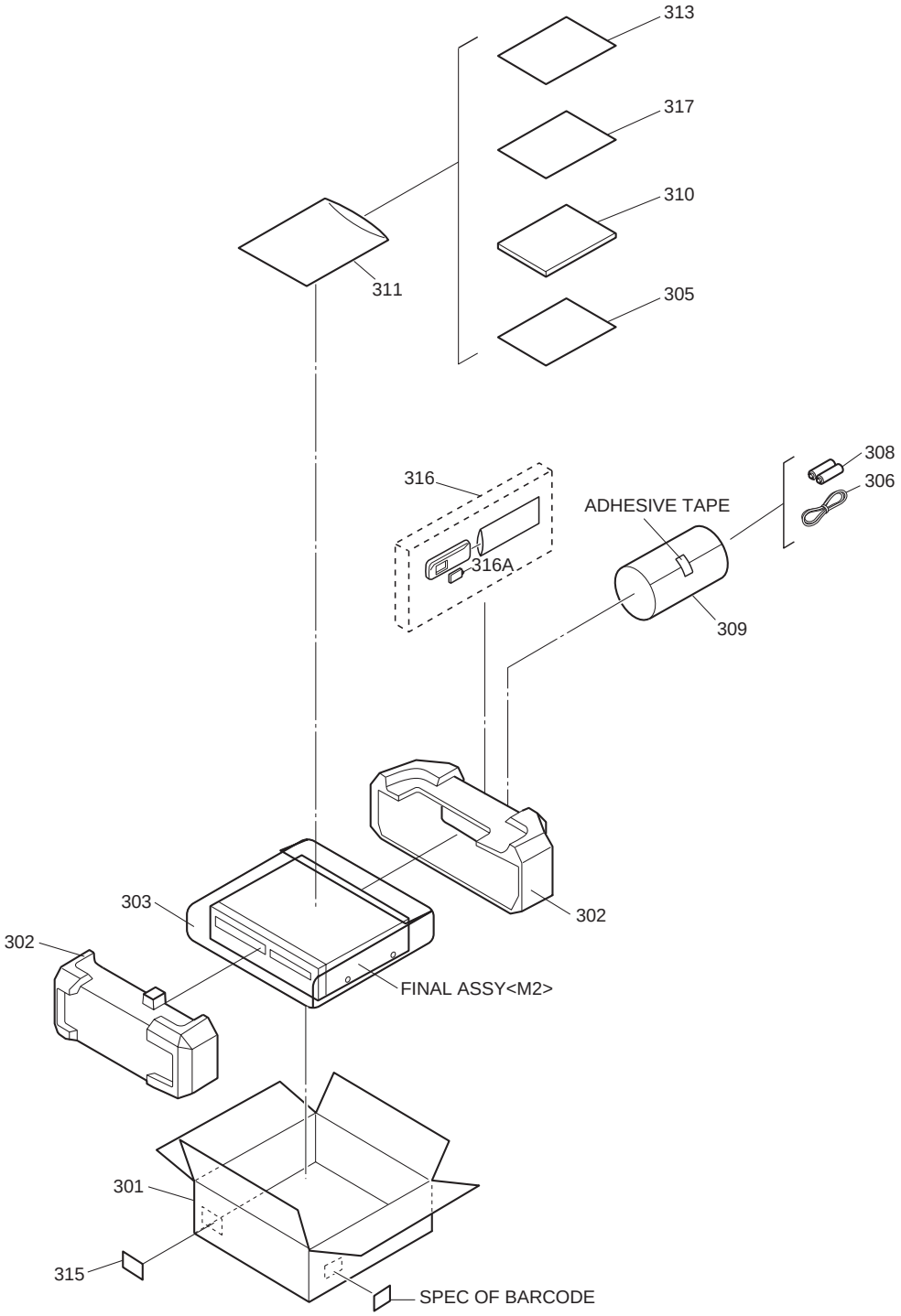

1.2 FINAL ASSEMBLY <M2>

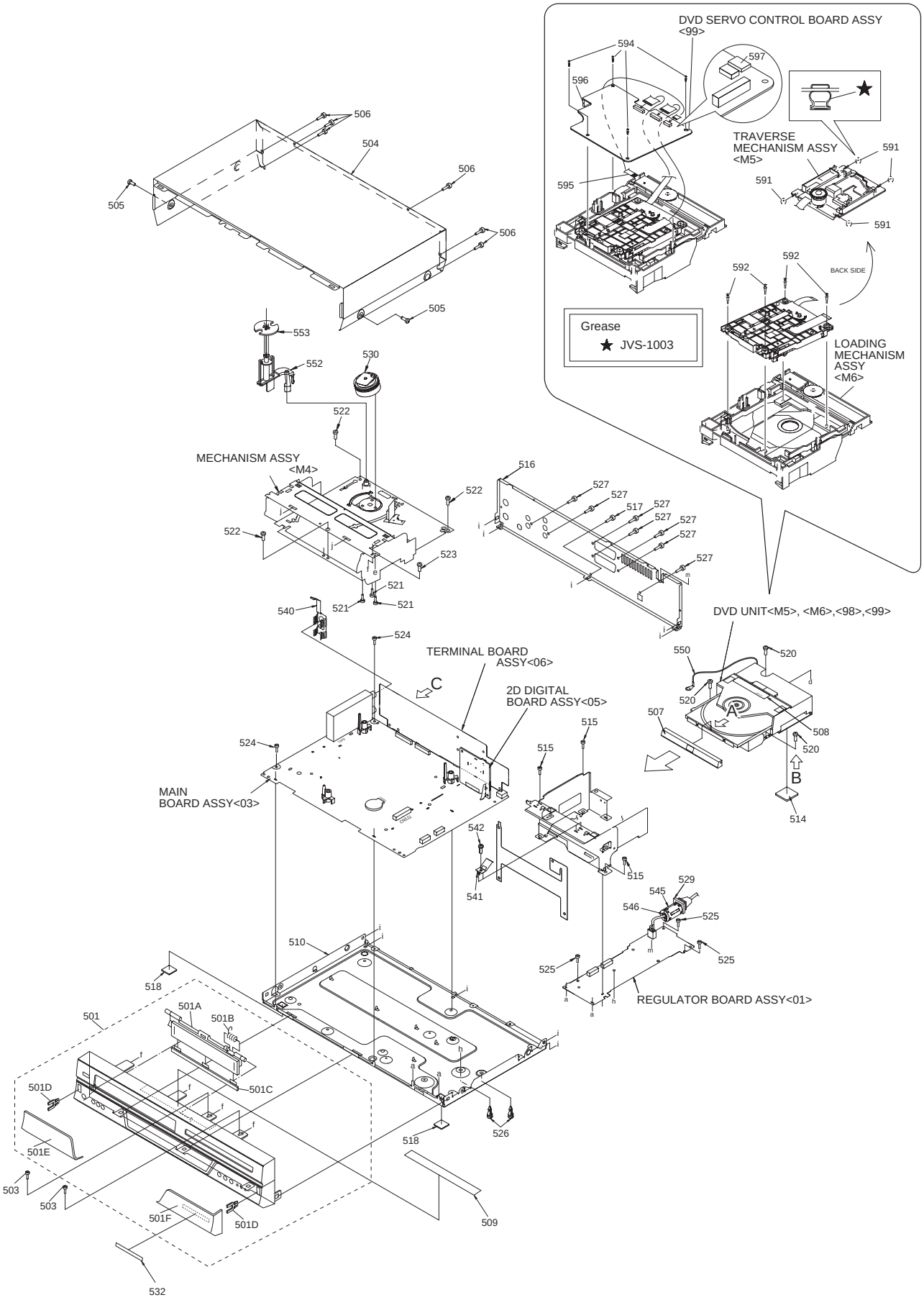

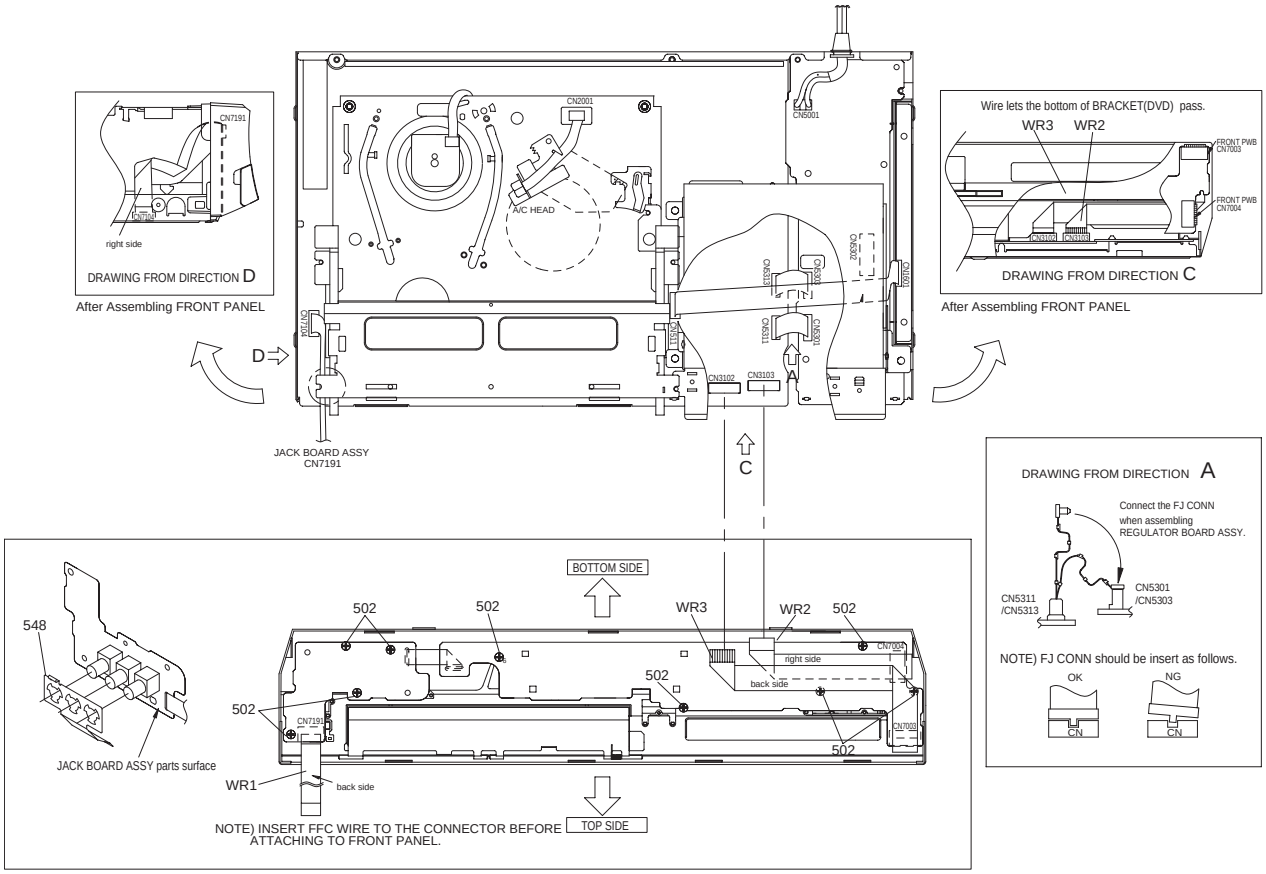

1. Insert direction of FCC WIRE as follows.

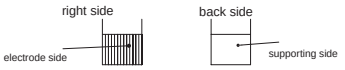

2. FFC WIRE and DRUM FPC WIRE should be insert as follows.

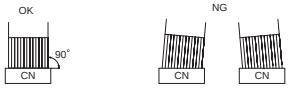

3. Insert direction of POWER CORD.

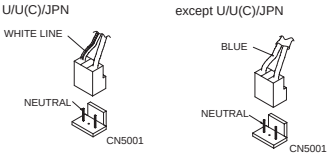

4. Insert the wire to even the root of connector completely at the same time as inserting each wire.

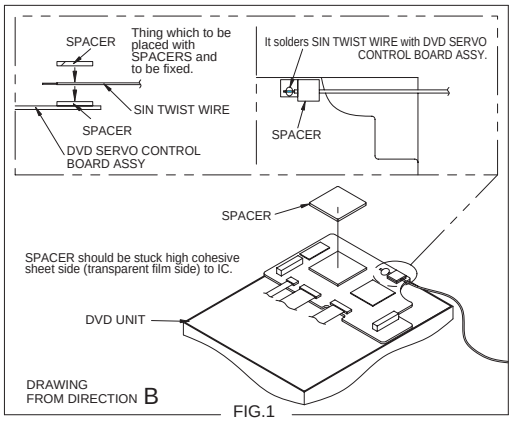

FIG.1

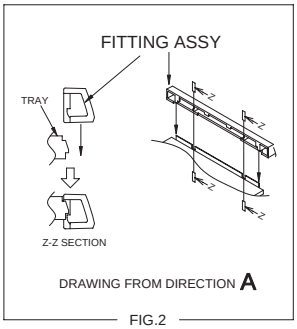

FIG.2

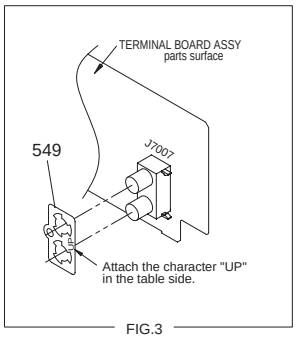

FIG.3

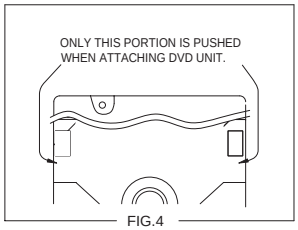

FIG.4

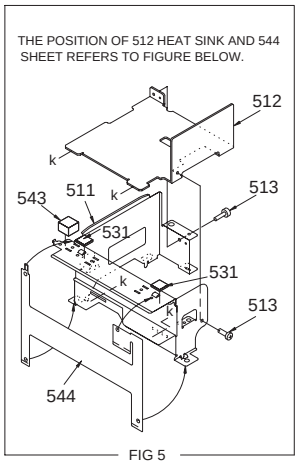

FIG 5

1.3 MECHANISM ASSEMBLY <M4>

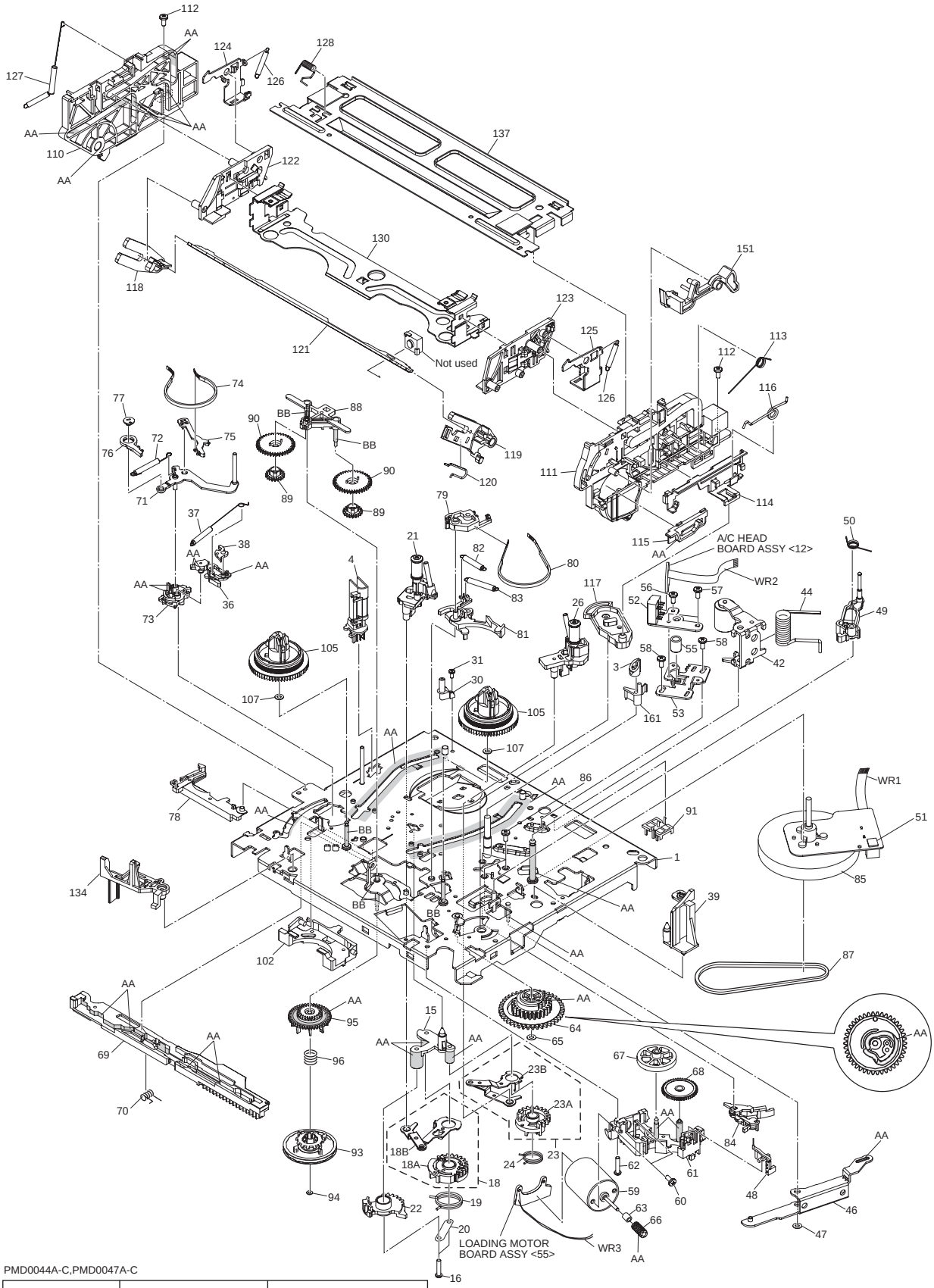

PMD0044A-C,PMD0047A-C

Classification	Part No.	Symbol in drawing
Grease	KYODO-SH-JB	AA
Oil	COSMO-HV56	BB

NOTE: The section marked in **AA** and **BB** indicate lubrication and greasing areas.

1.4 TRAVERSE MECHANISM ASSEMBLY <M5>

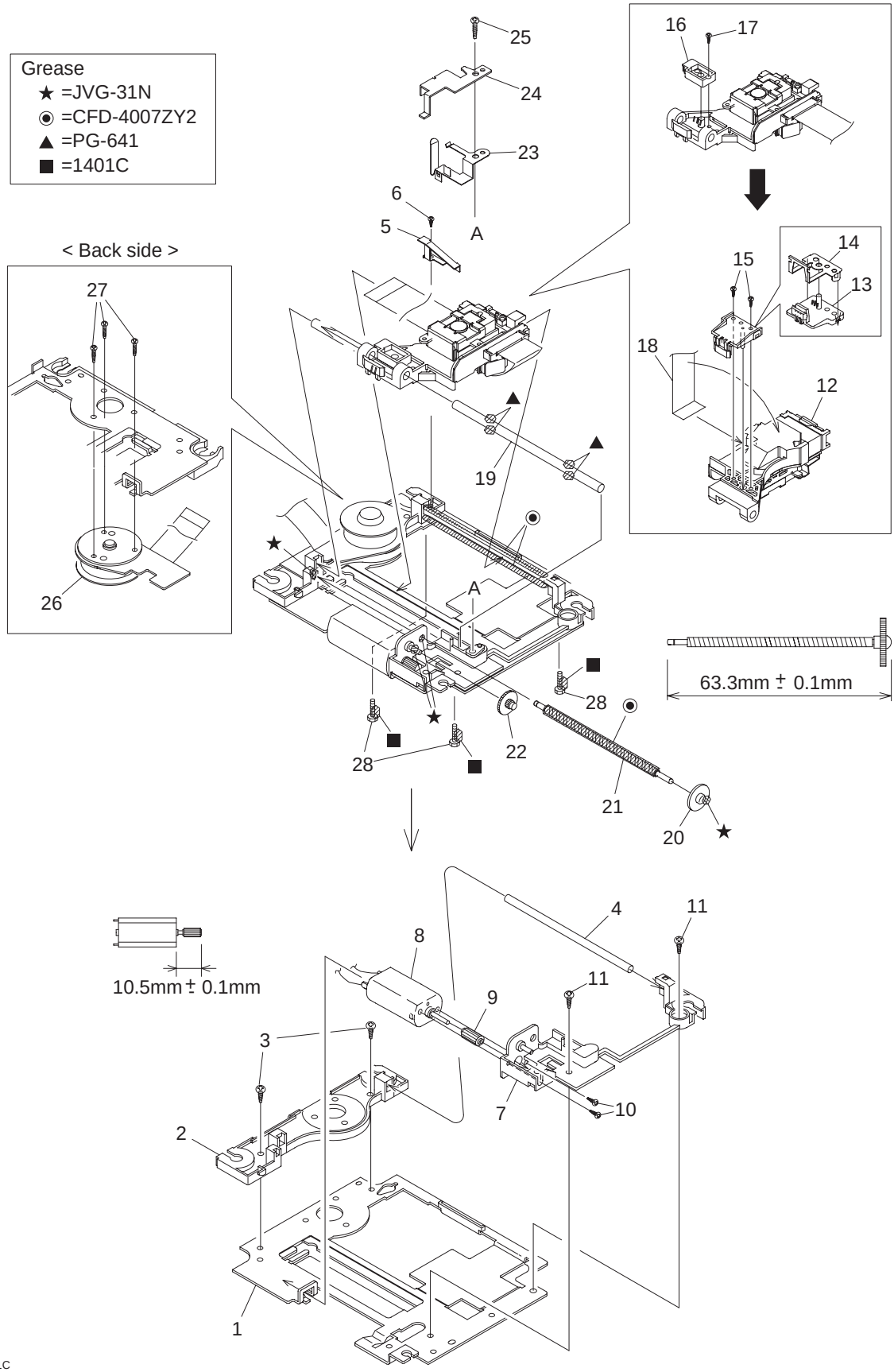

1.5 LOADING MECHANISM ASSEMBLY <M6>

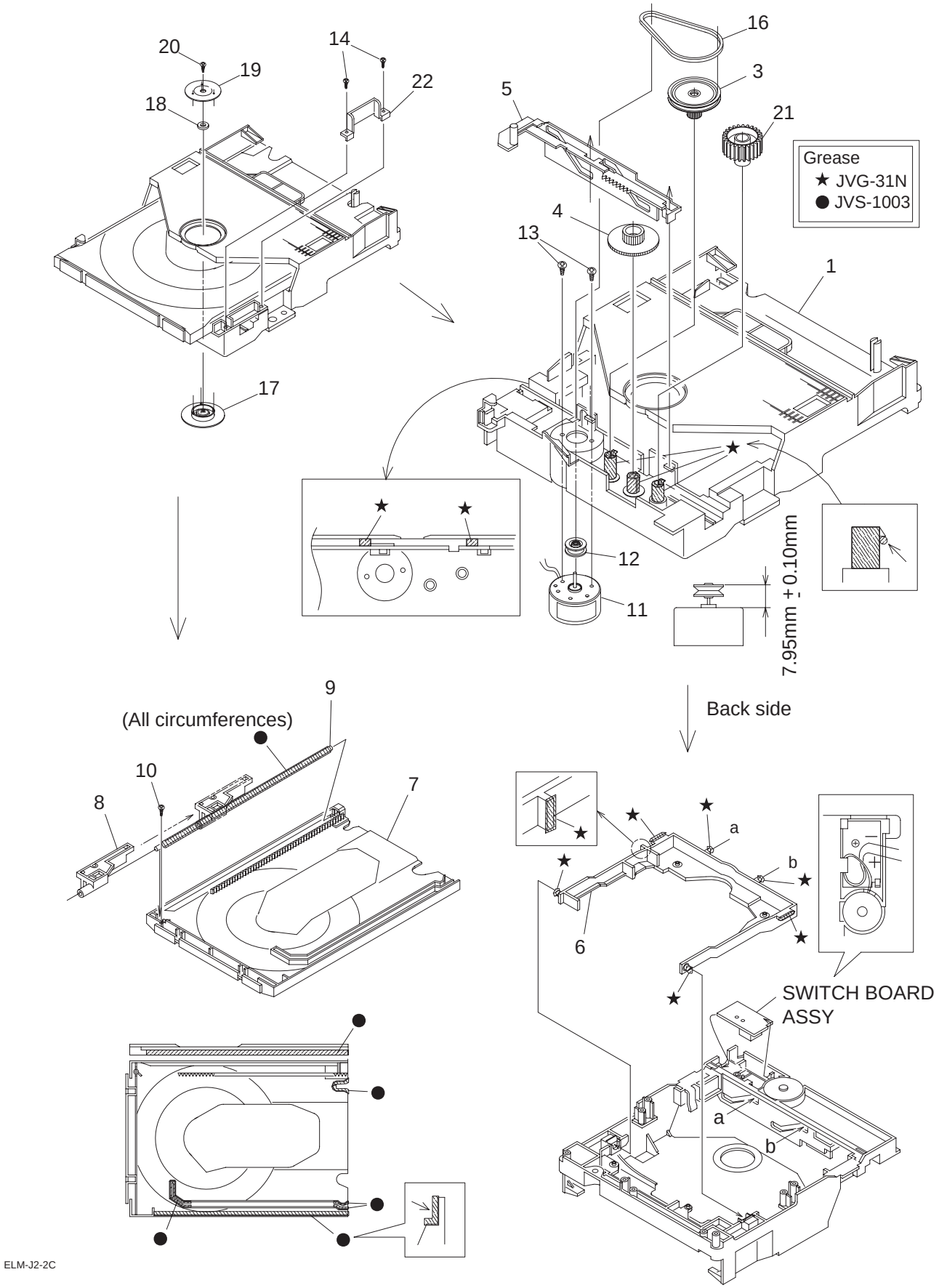

MODEL	MARK	MODEL	MARK
HR-XV3EK	A	HR-XV31EX	E
HR-XV31EK	B	HR-XVS30EK	F
HR-XV32EK	C	HR-XVS30EX	G
HR-XV3EX	D		

2. PARTS LIST

PACKING AND ACCESSORY ASSEMBLY <M1>

⚠ Symbol No.	Part No.	Part Name	Description	Local
301	LP31296-004A	PACKING CASE		C
301	LP31296-002A	PACKING CASE		A,D
301	LP31296-003A	PACKING CASE		B,E
301	LP31296-001A	PACKING CASE		F,G
302	LP31295-001B	CUSHION ASSY		
303	PQM30021-95	POLY BAG		
305	LYT0194-001B	Q.CARD		A,B,C,F
306	QAM0002-001	RF CABLE		C
306	PEAC0300-02	RF CABLE		A,B,D,E,F,G
308	----------	BATTERY	R6 TYPE(x2)	
309	QPC02202230P	POLY BAG	22cm x 22cm	
⚠ 310	LPT0868-001A	INST.BOOK	(ENGLISH)	B
⚠ 310	LPT0865-001A	INST.BOOK	(ENGLISH)	A,C
⚠ 310	LPT0864-001A	INST.BOOK	(ENGLISH)	D
⚠ 310	LPT0864-002A	INST.BOOK	(GERMANY)	D
⚠ 310	LPT0864-003A	INST.BOOK	(FRENCH)	D
⚠ 310	LPT0864-004A	INST.BOOK	(DUCH)	D
⚠ 310	LPT0864-005A	INST.BOOK	(SPANISH)	D
⚠ 310	LPT0864-006A	INST.BOOK	(ITALIAN)	D
⚠ 310	LPT0864-007A	INST.BOOK	(DANISH)	D
⚠ 310	LPT0864-008A	INST.BOOK	(FINNISH)	D
⚠ 310	LPT0864-009A	INST.BOOK	(SWEDISH)	D
⚠ 310	LPT0864-010A	INST.BOOK	(NORWEGIAN)	D
⚠ 310	LPT0864-011A	INST.BOOK	(PORTUGUESE)	D
⚠ 310	LPT0864-012A	INST.BOOK	(GREEK)	D
⚠ 310	LPT0864-013A	INST.BOOK	(CZECH)	D
⚠ 310	LPT0864-014A	INST.BOOK	(POLISH)	D
⚠ 310	LPT0864-015A	INST.BOOK	(HUNGARIAN)	D
⚠ 310	LPT0880-001A	INST.BOOK	(ENGLISH)	E
⚠ 310	LPT0880-002A	INST.BOOK	(GERMANY)	E
⚠ 310	LPT0880-003A	INST.BOOK	(FRENCH)	E
⚠ 310	LPT0880-004A	INST.BOOK	(DUCH)	E
⚠ 310	LPT0880-005A	INST.BOOK	(SPANISH)	E
⚠ 310	LPT0880-006A	INST.BOOK	(ITALIAN)	E
⚠ 310	LPT0880-007A	INST.BOOK	(DANISH)	E
⚠ 310	LPT0880-008A	INST.BOOK	(FINNISH)	E
⚠ 310	LPT0880-009A	INST.BOOK	(SWEDISH)	E
⚠ 310	LPT0880-010A	INST.BOOK	(NORWEGIAN)	E
⚠ 310	LPT0880-011A	INST.BOOK	(PORTUGUESE)	E
⚠ 310	LPT0880-012A	INST.BOOK	(GREEK)	E
⚠ 310	LPT0880-013A	INST.BOOK	(CZECH)	E
⚠ 310	LPT0880-014A	INST.BOOK	(POLISH)	E
⚠ 310	LPT0880-015A	INST.BOOK	(HUNGARIAN)	E
⚠ 310	LPT0861-001A	INST.BOOK	(ENGLISH)	F
⚠ 310	LPT0860-001A	INST.BOOK	(ENGLISH)	G
⚠ 310	LPT0860-002A	INST.BOOK	(GERMANY)	G
⚠ 310	LPT0860-003A	INST.BOOK	(FRENCH)	G
⚠ 310	LPT0860-004A	INST.BOOK	(DUCH)	G
⚠ 310	LPT0860-005A	INST.BOOK	(SPANISH)	G
⚠ 310	LPT0860-006A	INST.BOOK	(ITALIAN)	G
⚠ 310	LPT0860-007A	INST.BOOK	(DANISH)	G
⚠ 310	LPT0860-008A	INST.BOOK	(FINNISH)	G
⚠ 310	LPT0860-009A	INST.BOOK	(SWEDISH)	G
⚠ 310	LPT0860-010A	INST.BOOK	(NORWEGIAN)	G
⚠ 310	LPT0860-011A	INST.BOOK	(PORTUGUESE)	G
⚠ 310	LPT0860-012A	INST.BOOK	(GREEK)	G
⚠ 310	LPT0860-013A	INST.BOOK	(CZECH)	G
⚠ 310	LPT0860-014A	INST.BOOK	(POLISH)	G
⚠ 310	LPT0860-015A	INST.BOOK	(HUNGARIAN)	G
311	QPC02503530P	POLY BAG	25cm x 35cm	A,B,C,F
311	QPC02503530P	POLY BAG	25cm x 35cm(x2)	D,E,G
313	BT-54013-7	WARRANTY CARD		D,E,G
315	LP41135-001A	STICKER(CARTON)	(x2)	F,G
316	LP21036-036A	REMOCON		C
316	LP21036-035A	REMOCON		A,B,D,E,F,G
316A	LP40254-004A	COVER(BATTERY)		C
316A	LP40254-008A	COVER(BATTERY)		A,B,D,E,F,G
317	BT-54008-6	GUARANTY CARD		A,B,C,F

FINAL ASSEMBLY <M2>

⚠ Symbol No.	Part No.	Part Name	Description	Local
⚠ 501	LP10490-013A	FRONT PANEL ASSY		A
⚠ 501	LP10492-007C	FRONT PANEL ASSY		B
⚠ 501	LP10490-017A	FRONT PANEL ASSY		C
⚠ 501	LP10490-012A	FRONT PANEL ASSY		D
⚠ 501	LP10492-009C	FRONT PANEL ASSY		E
⚠ 501	LP10490-008A	FRONT PANEL ASSY		F
⚠ 501	LP10490-007A	FRONT PANEL ASSY		G
501A	LP21181-003A	CASSETTE DOOR		C
501A	LP21181-001A	CASSETTE DOOR		A,D
501A	LP21188-002A	CASSETTE DOOR		B,E
501A	LP21181-002A	CASSETTE DOOR		F,G
501B	PQ46448	TORSION SPRING		
501C	LP31269-002A	ORNAMENT(C.DOOR)		B,E
501C	LP31271-002A	ORNAMENT(C.DOOR)		A,C,D,F,G
501D	PU60109	CATCHER	(x2)	A,C,D,F,G
501E	LP21191-013A	DOOR(L)		A
501E	LP21191-017A	DOOR(L)		C
501E	LP21191-012A	DOOR(L)		D
501E	LP21191-008A	DOOR(L)		F
501E	LP21191-007A	DOOR(L)		G
501F	LP21192-005A	DOOR(R)		C
501F	LP21192-003A	DOOR(R)		A,D,F,G
502	QYTDSF2608Z	TAP SCREW	M2.6 x 8mm DISPLAY JACK(x9)	
503	LP40990-001A	SPECIAL SCREW	FRONT PANEL(x2)	B,E
503	LP40990-001A	SPECIAL SCREW	FRONT PANEL	A,C,D,F,G
⚠ 504	LP10488-004B	TOP COVER		C
⚠ 504	LP10488-002B	TOP COVER		A,B,D,E,F,G
505	QYSBSG3006M	TAP SCREW	M3 x 6mm TOP SIDE(x2)	C
505	QYSBSG3006N	TAP SCREW	3mm x 6mm TOP SIDE(x2)	A,B,D,E,F,G
506	QYSBSG3006M	TAP SCREW	M3 x 6mm TOP REAR(x6)	C
506	QYSBSG3006N	TAP SCREW	3mm x 6mm TOP REAR(x6)	A,B,D,E,F,G
507	LP31261-003A	FITTING ASSY		C
507	LP31261-001A	FITTING ASSY		A,D
507	LP31261-002A	FITTING ASSY		F,G
⚠ 508	LP41077-001A	LABEL(CAUTION)		
509	LP31288-006A	STICKER(TOP)		A,B,C
509	LP31288-005A	STICKER(TOP)		D,E
509	LP31288-002A	STICKER(TOP)		F
509	LP31288-001A	STICKER(TOP)		G
⚠ 510	LP10489-001B	BOTTOM CHASSIS		
511	LP21177-001B	BRACKET(DVD)		
512	LP21182-001A	HEAT SINK		
513	QYSDST3006Z	TAP SCREW	3mm x 6mm HEAT SINK(x2)	
514	LP40769-001A	SPACER		
515	LP40990-001A	SPECIAL SCREW	BRACKET(DVD)(x3)	
⚠ 516	LP21178-012A	REAR COVER		A,B,C,D,E
⚠ 516	LP21178-009A	REAR COVER		F,G
517	QYSBSG3006M	TAP SCREW	M3 x 6mm REAR COVER	
518	LP31348-001A	FOOT	(x2)	
520	QYSBSG3010Z	TAP SCREW	3mm x 10mm DVD UNIT(x3)	
521	QYSPSPD3008Z	SCREW	3mm x 8mm DRUM(x3)	
522	LP40980-001A	SPECIAL SCREW	MECHANISM(x3)	
523	LP40990-001A	SPECIAL SCREW	HOUSING	
524	LP40990-001A	SPECIAL SCREW	MAIN(x2)	
525	LP40990-001A	SPECIAL SCREW	REGULATOR(x3)	
526	LP40696-008A	HOLDER(PWB)	(x2)	
527	QYTDSF3008M	TAP SCREW	M3 x 8mm JACK(x6)	A,B,C,D,E
527	QYTDSF3008M	TAP SCREW	M3 x 8mm JACK(x7)	F,G
⚠ 529	QMP51K0-170-K	POWER CORD	1.7m BLACK	A,B,C,F
⚠ 529	QMP4A10-170	POWER CORD	1.7m BLACK	D,E,G
530	PDV2539B	DRUM FINAL ASSY		A,B,C,D,E
530	PDV2544A	DRUM FINAL ASSY		F,G
531	LP30002-0E5A	SPACER	(x2)	
532	LP41120-001A	STICKER(FRONT)		F,G
540	PQ21623-2-5	EARTH PLATE(RF)		
541	PQ44695-1-1	EARTH PLATE		
542	LP40990-001A	SPECIAL SCREW	EARTH PLATE	
543	LP40983-001A	SHIELD TIGHT		
544	LP31306-001A	SHEET(SHIELD)		
545	QQR0491-002	CORE FILTER		
546	PU43192-4	BINDER		
548	LP31337-001A	EARTH PLATE		
549	LP31345-001A	EARTH PLATE		
550	QUB221-10A4XL	SIN TWIST WIRE	DVD UNIT	
552	LP40370-001F	ROLLER ARM ASSY		F,G

MODEL	MARK	MODEL	MARK
HR-XV3EK	A	HR-XV31EX	E
HR-XV31EK	B	HR-XVS30EK	F
HR-XV32EK	C	HR-XVS30EX	G
HR-XV3EX	D		

⚠ Symbol No.	Part No.	Part Name	Description	Local
553	PQ45160	INERTIA PLATE		F,G
591	LE40900-003A	INSULATOR	(x4)	
592	LE40901-001A	SPECIAL SCREW	(x4)	
594	QYSDSF2608Z	SCREW	2.6mm x 8mm(x4)	
595	QUQ110-0518BF	FFC WIRE		
596	LE30001-034A	SPACER		
597	VYSH101-034	SPACER		
WR1	QUQ112-0714CG	FFC WIRE	JACK CN7191-MAIN CN7104	A,B,C,D,E
WR1	QUQ112-1115CG	FFC WIRE	JACK CN7191-MAIN CN7104	F,G
WR2	QUQ112-1414CG	FFC WIRE	DISLAY CN7004-MAIN CN3103	
WR3	QUQ112-1422CG	FFC WIRE	DISPLAY CN7003-MAIN CN3102	

MECHANISM ASSEMBLY <M4>

⚠ Symbol No.	Part No.	Part Name	Description	Local
1	LP21039-001X	MAIN DECK ASSY		
3	LP40097-002E	GUIDE POLE CAP		
4	NAH0004-001	FE HEAD		
15	LP30958-001B	LOADING GEAR BASE		
16	QYTPST2620Z	TAP SCREW	2.6mm x 20mm(x2)	
18	LP40798-001A	LOADING GEAR(SUPPLY) ASSY		
18A	LP21040-001A	LOADING GEAR(SUPPLY)		
18B	LP40799-001A	LOADING ARM(SUPPLY) ASSY		
19	LP40837-001A	TORSION SPRING(SUPPLY)		
20	LP40903-002B	FIXING PLATE		
21	LP40806-001D	POLE BASE ASSY(SUPPLY)		
22	LP30959-001B	LOADING GEAR		
23	LP40802-001C	LOADING GEAR(TAKE UP) ASSY		
23A	LP21041-001D	LOADING GEAR(TAKE UP)		
23B	LP40803-001A	LOADING ARM(TAKE UP) ASSY		
24	LP40838-001A	TORSION SPRING(TAKE UP)		
26	LP40808-001E	POLE BASE ASSY(TAKE UP)		
30	LP31020-005A	ARM BASE		F,G
31	QYTDST2606Z	TAP SCREW	2.6mm x 6mm	F,G
36	LP21055-001G	TAKE UP LEVER		
37	LP40943-001A	TENSION SPRING		
38	LP40859-001D	TAKE UP HEAD		
39	LP30961-001C	LID GUIDE		
42	LP40810-001C	PINCH ROLLER ARM ASSY		
44	LP40840-001D	TORSION SPRING		
46	LP30963-001C	PRESS LEVER		
47	PQM30017-24	SLIT WASHER		
48	LP40930-002F	S-SWITCH		F,G
49	LP40813-001D	GUIDE ARM ASSY		
50	LP40841-001A	TORSION SPRING		
51	LP30002-090A	SPACER		A,B,C,D,E
52	NAH0003-001	AC HEAD		
53	LP30965-001A	HEAD BASE		
55	LP40842-001D	COMPRESSION SPRING		
56	QYTDST2006M	TAP SCREW	M2 x 6mm	
57	LP41036-001A	A/C ADJ.SCREW	(x2)	
58	QYTDST2606Z	TAP SCREW	2.6mm x 6mm(x2)	
59	QAR0289-001	LOADING MOTOR		
60	QYTPSP3003Z	SCREW	3mm x 3mm(x2)	
61	LP21056-002J	MOTOR BRACKET		
62	QYTPST2620Z	TAP SCREW	2.6mm x 20mm	
63	LP40814-001B	WORM BEARING		
64	LP21044-001E	CONTROL CAM		
65	PQM30017-24	SLIT WASHER		
66	LP40815-001A	WORM GEAR		
67	LP40816-001B	HELICAL GEAR		
68	LP40817-001A	CONNECT GEAR		
69	LP10400-001L	CONTROL PLATE		
70	LP40843-001A	TORSION SPRING		
71	LP40818-001B	TENSION ARM ASSY		
72	LP40844-001F	TENSION SPRING		
73	LP21045-001E	TENSION ARM BASE		
74	LP40821-001A	TENSION BAND ASSY		
75	LP30967-001B	BAND HOLDER-1		
76	LP30968-001C	BAND HOLDER-2		
77	LP40822-002B	ADJUST PIN		
78	LP31000-005E	TENSION ARM LEVER		
79	LP21046-001C	MAIN BRAKE(TAKE UP)		
80	LP40824-001A	BAND BRAKE ASSY		
81	LP30969-002B	BRAKE LEVER		
82	LP30003-033B	TENSION SPRING		
83	LP30003-035B	TENSION SPRING		
84	LP40825-001B	CAPSTAN BRAKE ASSY		
⚠ 85	QAR0267-002	CAPSTAN MOTOR		
86	QYTPSG2606Z	TAP SCREW	2.6mm x 6mm(x3)	
87	LP30005-010A	BELT	CAPSTAN MOTOR	
88	LP30970-001A	IDLER ARM		
89	LP40828-004A	IDLER GEAR 1	(x2)	
90	LP40829-002A	IDLER GEAR 2	(x2)	
91	LP31014-002A	WIRE HOLDER		
93	LP40934-001B	CLUTCH UNIT		
94	PQM30017-47	SLIT WASHER		
95	LP30973-001A	DIRECT GEAR		
96	LP40939-001A	COMPRESSION SPRING		
102	LP30974-001C	CHANGE LEVER		
105	LP21049-001A	REEL DISK	(x2)	
107	LP30017-004A	SPACER	REEL DISK(x2)	
110	LP10401-001L	SIDE FRAME(L)		
111	LP10402-001M	SIDE FRAME(R)		
112	QYTDST2606Z	TAP SCREW	2.6mm x 6mm(x2)	
113	LP40917-001D	TORSION SPRING		
114	LP30976-001E	SIDE PLATE		
115	LP30977-002D	LIMIT PLATE		
116	LP40846-001C	LIMIT SPRING		
117	LP31100-002A	DRIVE LEVER		
118	LP30978-001B	DRIVE ARM(L)		
119	LP30979-001R	DRIVE ARM(R)		
120	LP40847-001B	TORSION SPRING		
121	LP30980-001E	CONNECT PLATE		
122	LP10403-001C	SIDE HOLDER(L)		
123	LP10404-001E	SIDE HOLDER(R)		
124	LP30983-001B	LOCK LEVER(L)		
125	LP30984-001B	LOCK LEVER(R)		
126	LP40924-001D	TENSION SPRING	(x2)	
127	LP40972-001A	EARTH SPRING(1)		
128	LP40857-001B	EARTH SPRING(2)		
130	LP30981-001G	CASSETTE HOLDER ASSY		
134	LP21051-002C	REC SAFETY LEVER		
137	LP21052-001K	TOP FRAME		
151	LP30985-002M	DOOR OPENER		
161	LP40993-001A	TAPE GUIDE		
WR1	WJT0117-001A	E-CARD WIRE	DRUM	
WR2	WJT0067-001B	E-CARD WIRE	A/C HEAD CN2001	
WR3	WJS0022-001A	E-FL/RB WIRE	LOADING MOTOR	

TRAVERSE MECHANISM ASSEMBLY <M5>

⚠ Symbol No.	Part No.	Part Name	Description	Local
1	LE20697-003A	MECHA BASE		
2	LE20699-002A	SPINDLE BASE		
3	QYSDST2604M	TAP SCREW	2.6mm x 4mm(x2)	
4	LE40931-001A	SHAFT		
5	LV33991-001A	ADJUST SPRING		
6	QYSPSFU2040M	TAP SCREW	M2 x 4mm	
7	LE20698-003A	FEED HOLDER		
8	QAR0215-001	FEED MOTOR		
9	LV41510-001A	FEED GEAR T		
10	QYSPSPU2040M	TAP SCREW	M2 x 4mm(x2)	
11	QYSDST2604M	TAP SCREW	2.6mm x 4mm(x2)	
12	QAL0507-001	PICK UP		
13	LE20700-001A	SW ACTUATOR		
14	LE31067-002A	LEAD SPRING		
15	QYSPSFU1740Z	TAP SCREW	M1.7 x 4mm(x2)	
16	LE40929-001A	SW.LEVER		
17	QYSPSFU1740Z	TAP SCREW	M1.7 x 4mm	
18	QUQ105-24X8AC	FFC		
19	LE40931-001A	SHAFT		
20	LE40855-001A	FEED GEAR E		
21	LE40918-001A	LEAD SCREW		
22	LE40930-001A	FEED GEAR M		
23	LE40928-001A	THURUST SPRING		
24	LE40927-001A	PLATE		
25	QYSDST2614Z	TAP SCREW	M2.6 x 14mm	

MODEL	MARK	MODEL	MARK
HR-XV3EK	A	HR-XV31EX	E
HR-XV31EK	B	HR-XVS30EK	F
HR-XV32EK	C	HR-XVS30EX	G
HR-XV3EX	D		

⚠ Symbol No.	Part No.	Part Name	Description	Local
26	QAR0284-001	SPINDLE MOTOR		
27	QYSPSPU1740Z	TAP SCREW	M1.7 x 4mm(x3)	
28	LE40858-002A	SPECIAL SCREW	(x3)	

LOADING MECHANISM ASSEMBLY <M6>

⚠ Symbol No.	Part No.	Part Name	Description	Local
1	LE10275-006A	LOADING BASE		
3	LE31043-001A	PULLEY GEAR		
4	LE31042-001A	MIDDLE GEAR		
5	LE20665-002A	SLIDE CAM		
6	LE20666-003A	ELEVATOR		
7	LE10276-002A	TRAY		
8	LE31045-001A	BUSHING		
9	LE40898-001A	SHAFT		
10	QYSSSF2008Z	TAP SCREW	M2 x 8mm	
11	QAR0197-001	MOTOR		
12	LV42087-002A	MOTOR PULLEY		
13	QYSPSPU1730Z	SCREW	FOR MOTOR(x2)	
14	QYSDSF2008Z	TAP SCREW	M2 x 8mm(x2)	
16	LE40897-001A	BELT		
17	LE31046-003A	CLAMPER		
18	LV42930-003A	MAGNET		
19	LE40899-001A	YOKE		
20	LE40906-001A	SPECIAL SCREW		
21	LE31044-001A	IDLE GEAR		
22	LE40937-002A	LEAF SPRING		

REGULATOR BOARD ASSEMBLY <01>

⚠ Symbol No.	Part No.	Part Name	Description	Local
PW1	LPA10206-11C1	REGULATOR BOARD ASSY		A,C,D
PW1	LPA10206-14B1	REGULATOR BOARD ASSY		B,E
PW1	LPA10206-09C1	REGULATOR BOARD ASSY		F,G
IC5201	UTCTL431-T	IC		
IC5201 or	MM1431AT-T	IC		
IC5201 or	L5431-T	IC		
IC5201 or	TL431/A/-T	IC		
IC5301	UTCTL431-T	IC		
IC5301 or	MM1431AT-T	IC		
IC5301 or	L5431-T	IC		
IC5301 or	TL431/A/-T	IC		
IC5302	MM1565AF-X	IC		
Q5101	2SK2632-CB14	POWER MOS FET		
Q5102	2SD2144S/UV/-T	TRANSISTOR		
Q5103	2SB709A/QR/-X	TRANSISTOR		
Q5103 or	2SA1037AK/QR/-X	TRANSISTOR		
Q5311	2SC5739/QP/	TRANSISTOR		
Q5315	2SC5739/QP/	TRANSISTOR		
Q5315 or	2SD2394/EF/	TRANSISTOR		
D5001	D3SBA60	DIODE		
D5001 or	GBJ4J	BRIDGE DIODE		
D5101	10ERB40-T2	FR DIODE		
D5101 or	AU01-T2	SI DIODE		
D5102	10ERB40-T2	FR DIODE		
D5102 or	AU01-T2	SI DIODE		
D5103	1SS133-T2	DIODE		
D5103 or	1SS270A-T2	SI DIODE		
D5105	1SS133-T2	DIODE		
D5105 or	1SS270A-T2	SI DIODE		
D5106	MTZJ33D-T2	Z DIODE		
D5106 or	RD33ES/B4/-T2	Z DIODE		
D5201	10ELS2-T2	FR DIODE		D
D5201 or	AU01Z-T2	FR DIODE		D
D5201	10ERB40-T2	FR DIODE		A,B,C,E,F,G
D5201 or	1F4G-T2	FR DIODE		
D5205	1F4G-T2	FR DIODE		
D5205 or	10ERB20-T2	FR DIODE		
D5206	1F4G-T2	FR DIODE		
D5206 or	10ERB20-T2	FR DIODE		
D5208	SB240-F26	SB DIODE		
D5208 or	RK14LF-B2	SBD		
D5208 or	21DQ04-F	SBD		
D5209	PG104RS-T2	FR DIODE		
D5209 or	10ERB20-T2	FR DIODE		
D5209 or	1F4G-T2	FR DIODE		
D5209 or	AU01Z-T2	FR DIODE		
D5209 or	1SR153-400-T2	FR DIODE		
D5210	PG104RS-T2	FR DIODE		
D5210 or	10ERB20-T2	FR DIODE		
D5210 or	1F4G-T2	FR DIODE		
D5210 or	AU01Z-T2	FR DIODE		
D5210 or	1SR153-400-T2	FR DIODE		
D5214	D1FS4A-X	SB DIODE		F,G
D5215	D1FS4A-X	SB DIODE		
D5216	D1FS4A-X	SB DIODE		
D5301	MTZJ15C-T2	Z DIODE		
D5301 or	RD15ES/B3/-T2	Z DIODE		
D5302	1SS133-T2	DIODE		
D5302 or	1SS270A-T2	SI DIODE		
⚠ D5303	MTZJ27C-T2	Z DIODE		
⚠ D5303 or	RD27ES/B3/-T2	Z DIODE		
D5310	MTZJ10B-T2	Z DIODE		
D5310 or	RD10ES/B2/-T2	Z DIODE		
⚠ PC5101	PC123Y22	PHOTO COUPLER		
⚠ C5001	QFZ9077-683	MPP CAPACITOR	0.068uF 257V M	
⚠ C5002	QFZ9051-223	MM CAPACITOR	0.022uF 250V M	
⚠ C5004	QCZ9079-222	C CAPACITOR	2200pF AC250V M	
C5006	QEZ0374-826	E CAPACITOR	82uF 400V M	
C5101	QCZ0336-330Z	C CAPACITOR	33pF 1kV J	
C5102	QCZ0333-472	C CAPACITOR	4700pF 1kV K	
C5104	QETN1HM-105Z	E CAPACITOR	1uF 50V M	
C5105	QFLC1HJ-183Z	M CAPACITOR	0.018uF 50V J	
C5106	NCB31HK-271X	C CAPACITOR	270pF 50V K	
C5107	QFVF1HJ-104Z	MF CAPACITOR	0.1uF 50V J	
C5201	QFVF1HJ-154Z	MF CAPACITOR	0.15uF 50V J	
C5202	QEMU1AM-567Z	E CAPACITOR	560uF 10V M	
C5203	QEMX0JM-227Z	E CAPACITOR	220uF 6.3V M	
C5204	QEMU1AM-567Z	E CAPACITOR	560uF 10V M	
C5205	QEMU1CM-397Z	E CAPACITOR	390uF 16V M	
C5206	QEMU1AM-567Z	E CAPACITOR	560uF 10V M	
C5207	QETN2AM-475Z	E CAPACITOR	4.7uF 100V M	
C5208	QEMU1HM-186Z	E CAPACITOR	18uF 50V M	
C5209	QETN1AM-107Z	E CAPACITOR	100uF 10V M	
C5210	QETN1CM-107Z	E CAPACITOR	100uF 16V M	
C5211	QETN1AM-107Z	E CAPACITOR	100uF 10V M	
C5301	NCB31EK-103X	C CAPACITOR	0.01uF 25V K	
C5306	NCF31AZ-105X	C CAPACITOR	1uF 10V Z	
C5307	NCB31HK-471X	C CAPACITOR	470pF 50V K	
C5309	QETN1AM-107Z	E CAPACITOR	100uF 10V M	
C5310	QETN1AM-107Z	E CAPACITOR	100uF 10V M	
C5311	QETN1AM-107Z	E CAPACITOR	100uF 10V M	
C5312	QETN1AM-107Z	E CAPACITOR	100uF 10V M	
C5313	QETN1AM-107Z	E CAPACITOR	100uF 10V M	
C5314	QETN1CM-107Z	E CAPACITOR	100uF 16V M	
R5101	QRE141J-224Y	C RESISTOR	220kΩ 1/4W J	
R5102	QRE141J-224Y	C RESISTOR	220kΩ 1/4W J	
R5103	QRE141J-683Y	C RESISTOR	68kΩ 1/4W J	
R5104	QRG02GJ-683	OMF RESISTOR	68kΩ 2W J	
R5106	QRT01DJ-R27X	MF RESISTOR	0.27Ω 1W J	
R5107	QRE121J-331Y	C RESISTOR	330Ω 1/2W J	
R5108	NRSA63J-222X	MG RESISTOR	2.2kΩ 1/16W J	
R5109	NRSA63J-681X	MG RESISTOR	680Ω 1/16W J	
R5110	NRSA63J-224X	MG RESISTOR	220kΩ 1/16W J	
R5111	NRSA63J-681X	MG RESISTOR	680Ω 1/16W J	
R5112	NRSA63J-221X	MG RESISTOR	220Ω 1/16W J	
R5113	NRSA63J-104X	MG RESISTOR	100kΩ 1/16W J	
R5201	NRSA63J-221X	MG RESISTOR	220Ω 1/16W J	
R5202	NRSA63J-102X	MG RESISTOR	1kΩ 1/16W J	
R5203	NRSA63J-102X	MG RESISTOR	1kΩ 1/16W J	
R5204	NRSA63D-332X	MG RESISTOR	3.3kΩ 1/16W D	
R5205	NRSA63D-123X	MG RESISTOR	12kΩ 1/16W D	

MODEL	MARK	MODEL	MARK
HR-XV3EK	A	HR-XV31EX	E
HR-XV31EK	B	HR-XVS30EK	F
HR-XV32EK	C	HR-XVS30EX	G
HR-XV3EX	D		

⚠ Symbol No.	Part No.	Part Name	Description	Local
R5206	NRSA63D-332X	MG RESISTOR	3.3kΩ 1/16W D	
R5302	NRSA63J-102X	MG RESISTOR	1kΩ 1/16W J	
R5305	NRSA63J-3R3X	MG RESISTOR	3.3Ω 1/16W J	
R5306	NRSA63J-2R2X	MG RESISTOR	2.2Ω 1/16W J	
R5307	NRSA63J-2R2X	MG RESISTOR	2.2Ω 1/16W J	
R5317	NRSA63J-473X	MG RESISTOR	47kΩ 1/16W J	
⚠ R5318	QRZ9005-470X	FUSI RESISTOR	47Ω 1/4W G	
R5319	NRSA63J-560X	MG RESISTOR	56Ω 1/16W J	
R5320	NRSA63D-153X	MG RESISTOR	15kΩ 1/16W D	
R5321	NRSA63D-473X	MG RESISTOR	47kΩ 1/16W D	
R5325	NRSA63J-101X	MG RESISTOR	100Ω 1/16W J	
L5201	PELN1184	CHOKE COIL		
L5202	PELN1184	CHOKE COIL		
L5203	PELN1184	CHOKE COIL		
L5301	QQL29BJ-220Z	P COIL	22uH J	
L5302	QQL231J-220Y	COIL	22uH J	
L5303	QQL231J-220Y	COIL	22uH J	
⚠ T5001	QQS0219-001	SW TRANSF		
⚠ CN5001	QGA7901C3-02	CONNECTOR	W-B (1-2)	
CN5301	QGB1231L1-11	CONNECTOR	B-B (1-11)	
CN5302	QGB2027MA-22	CONNECTOR	B-B (1-22)	
CN5303	QGB1231L1-11	CONNECTOR	B-B (1-11)	
⚠ CP5301	QMFZ050-1R5X-E	FUSE	1.5A 125V	
⚠ CP5302	QMFZ050-1R5X-E	FUSE	1.5A 125V	
⚠ F5001	QMF51W2-2R0-J8	FUSE	2A AC250V	
FC5001	QNG0020-001Z	FUSE CLIP		
FC5002	QNG0020-001Z	FUSE CLIP		
HS1	LP40621-001A	HEAT SINK	FOR Q5101	A,B,C,D,E
HS1	QZW0106-001	HEAT SINK	FOR Q5101	F,G
K5101	QQR0678-001Z	FERRITE BEADS		
⚠ LF5002	QQR0608-001	LINE FILTER		
OT1	QYTDST3008Z	TAP SCREW	M3 x 8mm FOR Q5101	

MAIN BOARD ASSEMBLY <03>

⚠ Symbol No.	Part No.	Part Name	Description	Local
PW1	LPA10215-12A	MAIN BOARD ASSY		B
PW1	LPA10215-04B	MAIN BOARD ASSY		A,C
PW1	LPA10215-03B	MAIN BOARD ASSY		D
PW1	LPA10215-11A	MAIN BOARD ASSY		E
PW1	LPA10215-02B	MAIN BOARD ASSY		F
PW1	LPA10215-01B	MAIN BOARD ASSY		G
IC1	JCP8060-MSA	IC		
IC201	LC74776-9791	IC		
IC501	JCP8058-2	IC		F,G
⚠ IC2201	AN3651FBP	IC		
IC3001	HD6432194SAD55F	IC(MCU)		
IC3001 or	HD64F2194CFD55	IC(MCU)		
IC3002	IC-PST3427U-X	IC		
IC3003	LPN0833-007A-07	IC(EEPROM)	*(REFER TO BELOW)	B
IC3003	LPN0833-005A-05	IC(EEPROM)	*(REFER TO BELOW)	A,C
IC3003	LPN0833-004A-14	IC(EEPROM)	*(REFER TO BELOW)	D
IC3003	LPN0833-008A-18	IC(EEPROM)	*(REFER TO BELOW)	E
IC3003	LPN0833-002A-02	IC(EEPROM)	*(REFER TO BELOW)	F
IC3003	LPN0833-001A-11	IC(EEPROM)	*(REFER TO BELOW)	G
IC6701	MSP3417GQGB8V3X	IC		
IC6701 or	MSP3417G-X	IC		
IC7102	MM1503XN-X	IC		F,G
IC8001	HA17558AF-X	IC		
IC8001 or	RC4558D-X	IC		
Q1	DTC144WKA-X	DIGI TRANSISTOR		F,G
Q1 or	UN221E-X	TRANSTSTOR		F,G
Q7	2SC2412K/QRS/-X	TRANSISTOR		
Q7 or	2SD601A/QRS/-X	TRANSISTOR		
Q7 or	2SC3928A/QRS/-X	TRANSISTOR		
Q8	2SC2412K/QRS/-X	TRANSISTOR		
Q8 or	2SD601A/QRS/-X	TRANSISTOR		
Q8 or	2SC3928A/QRS/-X	TRANSISTOR		
Q9	2SC2412K/QRS/-X	TRANSISTOR		
Q9 or	2SD601A/QRS/-X	TRANSISTOR		
Q9 or	2SC3928A/QRS/-X	TRANSISTOR		
Q10	2SC2412K/QRS/-X	TRANSISTOR		
Q10 or	2SD601A/QRS/-X	TRANSISTOR		
Q10 or	2SC3928A/QRS/-X	TRANSISTOR		
Q207	2SA1037AK/QR/-X	TRANSISTOR		F,G
Q207 or	2SB709A/QR/-X	TRANSISTOR		F,G
Q207 or	2SA1530A/QR/-X	TRANSISTOR		F,G
Q501	2SA1037AK/QR/-X	TRANSISTOR		F,G
Q501 or	2SB709A/QR/-X	TRANSISTOR		F,G
Q501 or	2SA1530A/QR/-X	TRANSISTOR		F,G
Q2001	2SC2412K/QRS/-X	TRANSISTOR		
Q2001 or	2SD601A/QRS/-X	TRANSISTOR		
Q2001 or	2SC3928A/QRS/-X	TRANSISTOR		
Q2002	2SC2412K/QRS/-X	TRANSISTOR		
Q2002 or	2SD601A/QRS/-X	TRANSISTOR		
Q2002 or	2SC3928A/QRS/-X	TRANSISTOR		
Q2003	DTA144WKA-X	TRANSISTOR		
Q2003 or	UN211E-X	DIGI TRANSISTOR		
Q2051	2SC2412K/QRS/-X	TRANSISTOR		
Q2051 or	2SD601A/QRS/-X	TRANSISTOR		
Q2051 or	2SC3928A/QRS/-X	TRANSISTOR		
Q2052	2SA1037AK/QR/-X	TRANSISTOR		
Q2052 or	2SB709A/QR/-X	TRANSISTOR		
Q2052 or	2SA1530A/QR/-X	TRANSISTOR		
Q2053	DTC144WKA-X	DIGI TRANSISTOR		
Q2053 or	UN221E-X	TRANSTSTOR		
Q2054	2SA1037AK/QR/-X	TRANSISTOR		
Q2054 or	2SB709A/QR/-X	TRANSISTOR		
Q2054 or	2SA1530A/QR/-X	TRANSISTOR		
Q2055	DTC144WKA-X	DIGI TRANSISTOR		
Q2055 or	UN221E-X	TRANSTSTOR		
Q2201	DTA144WKA-X	TRANSISTOR		
Q2201 or	UN211E-X	DIGI TRANSISTOR		
Q2202	DTC144WKA-X	DIGI TRANSISTOR		
Q2202 or	UN221E-X	TRANSTSTOR		
Q2203	2SC2412K/QRS/-X	TRANSISTOR		
Q2203 or	2SD601A/QRS/-X	TRANSISTOR		
Q2203 or	2SC3928A/QRS/-X	TRANSISTOR		
Q2204	2SC2412K/QRS/-X	TRANSISTOR		
Q2204 or	2SD601A/QRS/-X	TRANSISTOR		
Q2204 or	2SC3928A/QRS/-X	TRANSISTOR		
Q2251	DTC144WKA-X	DIGI TRANSISTOR		F,G
Q2251 or	UN221E-X	TRANSTSTOR		F,G
Q2252	DTC144WKA-X	DIGI TRANSISTOR		F,G
Q2252 or	UN221E-X	TRANSTSTOR		F,G
Q2253	DTC144WKA-X	DIGI TRANSISTOR		F,G
Q2253 or	UN221E-X	TRANSTSTOR		F,G
Q2254	DTC114EKA-X	TRANSISTOR		F,G
Q2254 or	UN2211-X	TRANSISTOR		F,G
Q2255	DTC114EKA-X	TRANSISTOR		
Q2255 or	UN2211-X	TRANSISTOR		
Q3002	PTZ-NV16A	IC(PHOTO SENSOR		
Q3003	PTZ-NV16A	IC(PHOTO SENSOR		
Q3004	2SC2412K/QRS/-X	TRANSISTOR		
Q3004 or	2SD601A/QRS/-X	TRANSISTOR		
Q3004 or	2SC3928A/QRS/-X	TRANSISTOR		
Q3005	2SC2412K/QRS/-X	TRANSISTOR		
Q3005 or	2SD601A/QRS/-X	TRANSISTOR		
Q3005 or	2SC3928A/QRS/-X	TRANSISTOR		
Q3007	DTC144WKA-X	DIGI TRANSISTOR		
Q3007 or	UN221E-X	TRANSTSTOR		
Q3008	DTC144WKA-X	DIGI TRANSISTOR		
Q3008 or	UN221E-X	TRANSTSTOR		
Q3401	2SC2412K/QRS/-X	TRANSISTOR		
Q3401 or	2SD601A/QRS/-X	TRANSISTOR		
Q3401 or	2SC3928A/QRS/-X	TRANSISTOR		
Q4001	DTC114EKA-X	TRANSISTOR		
Q4001 or	UN2211-X	TRANSISTOR		
Q5301	2SD2144S/UV/-T	TRANSISTOR		
Q5301 or	2SC3576-JVC-T	TRANSISTOR		
Q5302	DTA114EKA-X	DIGI TRANSISTOR		
Q5302 or	UN2111-X	TRANSISTOR		
Q5303	DTC114EKA-X	TRANSISTOR		
Q5303 or	UN2211-X	TRANSISTOR		
Q5306	2SD1302/ST/-T	TRANSISTOR		
Q5307	DTA114EKA-X	DIGI TRANSISTOR		
Q5307 or	UN2111-X	TRANSISTOR		
Q5308	2SB709A/QR/-X	TRANSISTOR		

*The VCR goes to jig RCU mode after replacing the EEPROM and the VCR does not accept some RCU command.
Therefore please set the VCR to the user RCU mode after replacing the EEPROM.
The method of setting the VCR to the user RCU mode is written on the service manual.

MODEL	MARK	MODEL	MARK
HR-XV3EK	A	HR-XV31EX	E
HR-XV31EK	B	HR-XVS30EK	F
HR-XV32EK	C	HR-XVS30EX	G
HR-XV3EX	D		

⚠ Symbol No.	Part No.	Part Name	Description	Local
Q5308	or 2SA1037AK/QR/-X	TRANSISTOR		
Q5308	or 2SA1530A/QR/-X	TRANSISTOR		
Q5309	DTC114EKA-X	TRANSISTOR		
Q5309	or UN2211-X	TRANSISTOR		
Q5312	DTA114EKA-X	DIGI TRANSISTOR		
Q5312	or UN2111-X	TRANSISTOR		
Q5313	2SC2412K/QRS/-X	TRANSISTOR		
Q5313	or 2SD601A/QRS/-X	TRANSISTOR		
Q5313	or 2SC3928A/QRS/-X	TRANSISTOR		
Q5314	2SC5739/QP/	TRANSISTOR		
Q5314	or 2SD2394/EF/	TRANSISTOR		
Q5316	2SD2144S/UV/-T	TRANSISTOR		
Q5316	or 2SC3576-JVC-T	TRANSISTOR		
Q6030	2SA1037AK/QR/-X	TRANSISTOR		
Q6030	or 2SB709A/QR/-X	TRANSISTOR		
Q6030	or 2SA1530A/QR/-X	TRANSISTOR		
Q6031	DTC114EKA-X	TRANSISTOR		
Q6031	or UN2211-X	TRANSISTOR		
Q6032	DTC114EKA-X	TRANSISTOR		
Q6032	or UN2211-X	TRANSISTOR		
Q8001	2SC2412K/QRS/-X	TRANSISTOR		
Q8001	or 2SD601A/QRS/-X	TRANSISTOR		
Q8001	or 2SC3928A/QRS/-X	TRANSISTOR		
Q8002	2SC2412K/QRS/-X	TRANSISTOR		
Q8002	or 2SD601A/QRS/-X	TRANSISTOR		
Q8002	or 2SC3928A/QRS/-X	TRANSISTOR		
Q8052	2SC2412K/QRS/-X	TRANSISTOR		
Q8052	or 2SD601A/QRS/-X	TRANSISTOR		
Q8052	or 2SC3928A/QRS/-X	TRANSISTOR		
Q8053	DTA114EKA-X	DIGI TRANSISTOR		
Q8053	or UN2111-X	TRANSISTOR		
D201	QRE141J-152Y	C RESISTOR	1.5kΩ 1/4W J	
D202	QRE141J-101Y	C RESISTOR	100Ω 1/4W J	
D203	QRE141J-101Y	C RESISTOR	100Ω 1/4W J	
D2001	1SS133-T2	DIODE		
D2001	or 1SS270A-T2	SI DIODE		
D2251	1SS133-T2	DIODE		
D2251	or 1SS270A-T2	SI DIODE		
D3001	LNB2301L01VI	LED		
D3002	1SS133-T2	DIODE		
D3002	or 1SS270A-T2	SI DIODE		
D3003	RD33ES/B3/-T2	Z DIODE		
D3003	or MTZJ33C-T2	Z DIODE		
D3004	10EDB20-T2	SI DIODE		
D3004	or 1A3G-T2	SI DIODE		
D3005	10EDB20-T2	SI DIODE		
D3005	or 1A3G-T2	SI DIODE		
D3007	1SS355-X	SI DIODE		
D3008	1SS355-X	SI DIODE		
D3401	RD3.6ES/B2/-T2	Z DIODE		
D3401	or MTZJ3.6B-T2	Z DIODE		
D5305	MTZJ11C-T2	Z DIODE		
D5305	or RD11ES/B3/-T2	Z DIODE		
D5306	MTZJ5.6C-T2	Z DIODE		
D5306	or RD5.6ES/B3/-T2	Z DIODE		
D5307	1SS133-T2	DIODE		
D5307	or 1SS270A-T2	SI DIODE		
D6002	HZ30-2L-T2	Z DIODE		
D6002	or HZ30-2LTD	Z DIODE		
D6701	1SS133-T2	DIODE		
D6701	or 1SS270A-T2	SI DIODE		
D7301	10EDB20-T2	SI DIODE		
D7301	or 1A3G-T2	SI DIODE		
PC3001	RPI-304J	IC(PHOTO SENSOR)		
PC3002	RPI-304J	IC(PHOTO SENSOR)		
C1	NDC31HJ-151X	C CAPACITOR	150pF 50V J	
C2	NDC31HJ-470X	C CAPACITOR	47pF 50V J	A,B,C,D,E
C2	NDC31HJ-4R0X	C CAPACITOR	4pF 50V J	F,G
C3	NDC31HJ-470X	C CAPACITOR	47pF 50V J	F,G
C4	QEKJ1EM-106Z	E CAPACITOR	10uF 25V M	
C5	NCB31CK-104X	C CAPACITOR	0.1uF 16V K	
C6	NCB31CK-104X	C CAPACITOR	0.1uF 16V K	
C7	NCB31CK-104X	C CAPACITOR	0.1uF 16V K	
C8	NCF31AZ-105X	C CAPACITOR	1uF 10V Z	
C9	QEKJ1HM-225Z	E CAPACITOR	2.2uF 50V M	

⚠ Symbol No.	Part No.	Part Name	Description	Local
C10	QEKJ0JM-476Z	E CAPACITOR	47uF 6.3V M	
C11	NCF31AZ-105X	C CAPACITOR	1uF 10V Z	
C12	QEKJ1HM-105Z	E CAPACITOR	1uF 50V M	
C14	QEKJ1HM-105Z	E CAPACITOR	1uF 50V M	
C15	NCB31CK-104X	C CAPACITOR	0.1uF 16V K	
C16	NCB31EK-103X	C CAPACITOR	0.01uF 25V K	F,G
C17	NCB31CK-104X	C CAPACITOR	0.1uF 16V K	A,B,C,D,E
C18	NCB31CK-104X	C CAPACITOR	0.1uF 16V K	F,G
C19	NCB31CK-104X	C CAPACITOR	0.1uF 16V K	
C20	NCB31CK-104X	C CAPACITOR	0.1uF 16V K	
C21	NCB31EK-103X	C CAPACITOR	0.01uF 25V K	F,G
C22	NCB31CK-104X	C CAPACITOR	0.1uF 16V K	A,B,C,D,E
C23	NCB31CK-104X	C CAPACITOR	0.1uF 16V K	F,G
C24	NCB31CK-104X	C CAPACITOR	0.1uF 16V K	
C25	QEKJ1HM-335Z	E CAPACITOR	3.3uF 50V M	
C26	QEKJ1EM-106Z	E CAPACITOR	10uF 25V M	
C27	NCB31EK-103X	C CAPACITOR	0.01uF 25V K	
C30	NDC31HJ-331X	C CAPACITOR	330pF 50V J	
C31	QEKJ0JM-476Z	E CAPACITOR	47uF 6.3V M	
C32	NCB31EK-103X	C CAPACITOR	0.01uF 25V K	
C33	QEKJ1EM-106Z	E CAPACITOR	10uF 25V M	
C34	NCB31EK-103X	C CAPACITOR	0.01uF 25V K	
C35	NCB31EK-103X	C CAPACITOR	0.01uF 25V K	
C36	QEKJ1HM-105Z	E CAPACITOR	1uF 50V M	
C37	NDC31HJ-4R0X	C CAPACITOR	4pF 50V J	
C38	NCB31EK-103X	C CAPACITOR	0.01uF 25V K	
C39	QEKJ0JM-476Z	E CAPACITOR	47uF 6.3V M	
C40	NCB31EK-103X	C CAPACITOR	0.01uF 25V K	
C41	NCB31CK-104X	C CAPACITOR	0.1uF 16V K	A,B,C,D,E
C41	NCB31EK-473X	C CAPACITOR	0.047uF 25V K	F,G
C43	QEKJ1HM-335Z	E CAPACITOR	3.3uF 50V M	
C44	QEKJ1HM-225Z	E CAPACITOR	2.2uF 50V M	
C45	NCB31EK-472X	C CAPACITOR	4700pF 25V K	
C46	NCB31CK-104X	C CAPACITOR	0.1uF 16V K	
C47	QEKJ1HM-474Z	E CAPACITOR	0.47uF 50V M	
C48	NCB31EK-223X	C CAPACITOR	0.022uF 25V K	
C49	QEKJ1HM-475Z	E CAPACITOR	4.7uF 50V M	
C56	NCB31CK-104X	C CAPACITOR	0.1uF 16V K	
C57	NCB31EK-103X	C CAPACITOR	0.01uF 25V K	
C58	NCB31EK-103X	C CAPACITOR	0.01uF 25V K	
C59	NCB31EK-103X	C CAPACITOR	0.01uF 25V K	
C60	NCB31HK-103X	C CAPACITOR	0.01uF 50V K	
C61	QEKC0JM-476Z	E CAPACITOR	47uF 6.3V M	
C62	QCBB1HK-103Y	C CAPACITOR	0.01uF 50V K	
C63	NCB31EK-103X	C CAPACITOR	0.01uF 25V K	
C64	NCB31EK-103X	C CAPACITOR	0.01uF 25V K	
C71	QEKJ1HM-105Z	E CAPACITOR	1uF 50V M	
C73	NRSA63J-0R0X	MG RESISTOR	0Ω 1/16W J	F,G
C201	QEKJ0JM-227Z	E CAPACITOR	220uF 6.3V M	
C204	NCB31EK-103X	C CAPACITOR	0.01uF 25V K	
C206	NDC31HJ-330X	C CAPACITOR	33pF 50V J	
C207	NDC31HJ-330X	C CAPACITOR	33pF 50V J	
C209	NCB31AK-474X	C CAPACITOR	0.47uF 10V K	
C210	NDC31HJ-101X	C CAPACITOR	100pF 50V J	
C211	NDC31HJ-101X	C CAPACITOR	100pF 50V J	
C212	NCB31CK-104X	C CAPACITOR	0.1uF 16V K	
C213	QEKJ1EM-475Z	E CAPACITOR	4.7uF 25V M	
C214	NCB31AK-224X	C CAPACITOR	0.22uF 10V K	
C215	NCB31AK-224X	C CAPACITOR	0.22uF 10V K	
C217	NDC31HJ-560X	C CAPACITOR	56pF 50V J	
C218	QEKJ1HM-105Z	E CAPACITOR	1uF 50V M	
C222	QEKJ1HM-105Z	E CAPACITOR	1uF 50V M	
C225	QEKJ0JM-227Z	E CAPACITOR	220uF 6.3V M	
C501	QEKJ0JM-476Z	E CAPACITOR	47uF 6.3V M	F,G
C502	NCB31EK-103X	C CAPACITOR	0.01uF 25V K	F,G
C503	QEKJ1HM-225Z	E CAPACITOR	2.2uF 50V M	F,G
C504	QEKJ1HM-225Z	E CAPACITOR	2.2uF 50V M	F,G
C507	NCB31EK-103X	C CAPACITOR	0.01uF 25V K	F,G
C508	NCB31CK-104X	C CAPACITOR	0.1uF 16V K	F,G
C509	NCB31EK-103X	C CAPACITOR	0.01uF 25V K	F,G
C510	NCB31EK-103X	C CAPACITOR	0.01uF 25V K	F,G
C511	QEKJ0JM-337Z	E CAPACITOR	330uF 6.3V M	F,G
C513	NDC31HG-221X	C CAPACITOR	220pF 50V G	F,G
C514	NDC31HG-271X	C CAPACITOR	270pF 50V G	F,G
C515	NDC31HG-121X	C CAPACITOR	120pF 50V G	F,G
C516	NDC31HG-271X	C CAPACITOR	270pF 50V G	F,G
C517	QEKJ1HM-475Z	E CAPACITOR	4.7uF 50V M	F,G
C518	QEKJ1HM-225Z	E CAPACITOR	2.2uF 50V M	F,G

MODEL	MARK	MODEL	MARK
HR-XV3EK	A	HR-XV31EX	E
HR-XV31EK	B	HR-XVS30EK	F
HR-XV32EK	C	HR-XVS30EX	G
HR-XV3EX	D		

⚠ Symbol No.	Part No.	Part Name	Description	Local
C519	NDC31HG-271X	C CAPACITOR	270pF 50V G	F,G
C520	QEKJ1HM-225Z	E CAPACITOR	2.2uF 50V M	F,G
C521	NCB31EK-103X	C CAPACITOR	0.01uF 25V K	F,G
C522	QEKJ1HM-475Z	E CAPACITOR	4.7uF 50V M	F,G
C523	NCB31EK-103X	C CAPACITOR	0.01uF 25V K	F,G
C524	QEKJ1EM-106Z	E CAPACITOR	10uF 25V M	F,G
C525	NCB31EK-103X	C CAPACITOR	0.01uF 25V K	F,G
C528	NCB31CK-104X	C CAPACITOR	0.1uF 16V K	F,G
C529	NCB31EK-103X	C CAPACITOR	0.01uF 25V K	F,G
C530	NCB31EK-103X	C CAPACITOR	0.01uF 25V K	F,G
C536	NCB31EK-103X	C CAPACITOR	0.01uF 25V K	F,G
C539	NCB31EK-103X	C CAPACITOR	0.01uF 25V K	F,G
C2001	QEKJ1HM-475Z	E CAPACITOR	4.7uF 50V M	
C2002	QEKJ1HM-105Z	E CAPACITOR	1uF 50V M	
C2003	QEKJ0JM-476Z	E CAPACITOR	47uF 6.3V M	
C2005	QEKJ1HM-475Z	E CAPACITOR	4.7uF 50V M	
C2006	NCB31EK-682X	C CAPACITOR	6800pF 25V K	
C2007	QEKJ1CM-226Z	E CAPACITOR	22uF 16V M	
C2008	QEKJ1HM-475Z	E CAPACITOR	4.7uF 50V M	
C2009	NCB31HK-122X	C CAPACITOR	1200pF 50V K	
C2010	NCB31HK-152X	C CAPACITOR	1500pF 50V K	
C2011	QEKJ1HM-475Z	E CAPACITOR	4.7uF 50V M	
C2012	QEKJ1HM-475Z	E CAPACITOR	4.7uF 50V M	
C2013	NDC31HJ-331X	C CAPACITOR	330pF 50V J	
C2051	NDC31HJ-331X	C CAPACITOR	330pF 50V J	
C2052	QFV91HJ-823Z	MF CAPACITOR	0.082uF 50V J	
C2053	NCB31HK-472X	C CAPACITOR	4700pF 50V K	
C2054	NCB31EK-223X	C CAPACITOR	0.022uF 25V K	
C2055	QEKJ1EM-106Z	E CAPACITOR	10uF 25V M	
C2201	QEKJ1EM-106Z	E CAPACITOR	10uF 25V M	
C2202	QEKJ1HM-475Z	E CAPACITOR	4.7uF 50V M	
C2203	QEKJ1HM-475Z	E CAPACITOR	4.7uF 50V M	
C2204	QEKJ0JM-336Z	E CAPACITOR	33uF 6.3V M	
C2205	QEKJ1EM-106Z	E CAPACITOR	10uF 25V M	
C2206	QEKJ1EM-106Z	E CAPACITOR	10uF 25V M	
C2207	NCB31EK-153X	C CAPACITOR	0.015uF 25V K	
C2208	NCB31EK-153X	C CAPACITOR	0.015uF 25V K	
C2209	QEKJ1EM-106Z	E CAPACITOR	10uF 25V M	
C2210	QEKJ1EM-106Z	E CAPACITOR	10uF 25V M	
C2211	QEKJ0JM-336Z	E CAPACITOR	33uF 6.3V M	
C2212	QEKJ0JM-476Z	E CAPACITOR	47uF 6.3V M	
C2214	QEKJ1EM-106Z	E CAPACITOR	10uF 25V M	
C2215	QEKJ1EM-106Z	E CAPACITOR	10uF 25V M	
C2216	QEKJ1CM-476Z	E CAPACITOR	47uF 16V M	
C2218	QEKJ1EM-106Z	E CAPACITOR	10uF 25V M	
C2219	QEKJ1CM-226Z	E CAPACITOR	22uF 16V M	
C2220	QEKJ1EM-106Z	E CAPACITOR	10uF 25V M	
C2221	NCB31EK-223X	C CAPACITOR	0.022uF 25V K	
C2222	NCB31EK-103X	C CAPACITOR	0.01uF 25V K	
C2223	NCB31CK-473X	C CAPACITOR	0.047uF 16V K	
C2224	NCB31CK-473X	C CAPACITOR	0.047uF 16V K	
C2225	NCB30JK-105X	C CAPACITOR	1uF 6.3V K	
C2226	NCB30JK-105X	C CAPACITOR	1uF 6.3V K	
C2227	QEKJ1EM-106Z	E CAPACITOR	10uF 25V M	
C2230	QEKJ1EM-106Z	E CAPACITOR	10uF 25V M	
C2231	QEKJ1EM-106Z	E CAPACITOR	10uF 25V M	
C2251	NCB31EK-103X	C CAPACITOR	0.01uF 25V K	
C2252	NCB31EK-103X	C CAPACITOR	0.01uF 25V K	
C2253	NCB31EK-103X	C CAPACITOR	0.01uF 25V K	
C2254	QEKJ0JM-476Z	E CAPACITOR	47uF 6.3V M	
C2255	NCB31EK-103X	C CAPACITOR	0.01uF 25V K	
C2256	NCB31EK-103X	C CAPACITOR	0.01uF 25V K	
C2257	NCB31EK-103X	C CAPACITOR	0.01uF 25V K	
C2258	NDC31HJ-181X	C CAPACITOR	180pF 50V J	
C2259	QEKJ1HM-334Z	E CAPACITOR	0.33uF 50V M	
C2261	NDC31HJ-101X	C CAPACITOR	100pF 50V J	
C2262	NDC31HJ-101X	C CAPACITOR	100pF 50V J	
C3008	NDC31HJ-101X	C CAPACITOR	100pF 50V J	
C3011	QETL0JM-338	E CAPACITOR	3300uF 6.3V M	
C3012	QEKJ0JM-476Z	E CAPACITOR	47uF 6.3V M	
C3015	NCB31CK-104X	C CAPACITOR	0.1uF 16V K	
C3016	NCB31EK-473X	C CAPACITOR	0.047uF 25V K	
C3020	NDC31HJ-101X	C CAPACITOR	100pF 50V J	
C3021	NDC31HJ-101X	C CAPACITOR	100pF 50V J	
C3022	NCB31EK-104X	C CAPACITOR	0.1uF 25V K	
C3024	NDC31HJ-120X	C CAPACITOR	12pF 50V J	
C3025	QAT3725-300Z	TRIM CAPACITOR	30pF,TIMER CLOCK	
C3026	NCB31EK-103X	C CAPACITOR	0.01uF 25V K	

⚠ Symbol No.	Part No.	Part Name	Description	Local
C3027	QEKJ1EM-106Z	E CAPACITOR	10uF 25V M	
C3030	QEKJ0JM-476Z	E CAPACITOR	47uF 6.3V M	
C3031	NCB31CK-473X	C CAPACITOR	0.047uF 16V K	
C3033	NCB31EK-473X	C CAPACITOR	0.047uF 25V K	
C3036	NDC31HJ-180X	C CAPACITOR	18pF 50V J	
C3037	NDC31HJ-120X	C CAPACITOR	12pF 50V J	
C3040	NCB31EK-103X	C CAPACITOR	0.01uF 25V K	
C3050	NCF31EZ-104X	C CAPACITOR	0.1uF 25V Z	
C3071	QEKJ1CM-336Z	E CAPACITOR	33uF 16V M	
C3401	NCB31EK-103X	C CAPACITOR	0.01uF 25V K	
C4002	NCF31EZ-104X	C CAPACITOR	0.1uF 25V Z	
C4004	QEKJ1CM-226Z	E CAPACITOR	22uF 16V M	
C4005	NCB21HK-222X	C CAPACITOR	2200pF 50V K	
C4006	QEKJ0JM-476Z	E CAPACITOR	47uF 6.3V M	
C4008	QEQF1HM-105Z	E CAPACITOR	1uF 50V M	
C4009	NRSA63J-0R0X	MG RESISTOR	0Ω 1/16W J	
C4010	NCB31EK-223X	C CAPACITOR	0.022uF 25V K	
C4011	NCB31CK-104X	C CAPACITOR	0.1uF 16V K	
C4012	QEKJ1HM-105Z	E CAPACITOR	1uF 50V M	
C4014	NDC31HJ-101X	C CAPACITOR	100pF 50V J	
C4015	NCB31HK-102X	C CAPACITOR	1000pF 50V K	
C5303	QETN1HM-225Z	E CAPACITOR	2.2uF 50V M	
C5304	QETN1CM-107Z	E CAPACITOR	100uF 16V M	
C5305	QETN1AM-107Z	E CAPACITOR	100uF 10V M	
C5315	QEKJ1CM-476Z	E CAPACITOR	47uF 16V M	
C5316	QEKJ1CM-107Z	E CAPACITOR	100uF 16V M	
C6005	QEKJ1HM-474Z	E CAPACITOR	0.47uF 50V M	
C6037	QEKJ1CM-106Z	E CAPACITOR	10uF 16V M	
C6707	NDC31HJ-470X	C CAPACITOR	47pF 50V J	
C6708	NDC31HJ-8R0X	C CAPACITOR	8pF 50V J	
C6709	NDC31HJ-8R0X	C CAPACITOR	8pF 50V J	
C6713	NCF31CZ-224X	C CAPACITOR	0.22uF 16V Z	
C6714	NCB31HK-222X	C CAPACITOR	2200pF 50V K	
C6715	QEKJ1HM-225Z	E CAPACITOR	2.2uF 50V M	
C6716	NCB31HK-222X	C CAPACITOR	2200pF 50V K	
C6717	QEKJ1HM-225Z	E CAPACITOR	2.2uF 50V M	
C6719	QEKJ1CM-106Z	E CAPACITOR	10uF 16V M	
C6720	QEKJ1CM-106Z	E CAPACITOR	10uF 16V M	
C6721	NCB31HK-103X	C CAPACITOR	0.01uF 50V K	
C6723	NCB31HK-103X	C CAPACITOR	0.01uF 50V K	
C6725	NCB31HK-103X	C CAPACITOR	0.01uF 50V K	
C6751	QEKJ0JM-337Z	E CAPACITOR	330uF 6.3V M	
C7106	QEKJ1EM-106Z	E CAPACITOR	10uF 25V M	F,G
C7110	NCB31EK-103X	C CAPACITOR	0.01uF 25V K	F,G
C7111	QEKJ0JM-476Z	E CAPACITOR	47uF 6.3V M	F,G
C7113	QEKJ1EM-106Z	E CAPACITOR	10uF 25V M	F,G
C7506	NCB31CK-104X	C CAPACITOR	0.1uF 16V K	
C7507	QEKJ0JM-107Z	E CAPACITOR	100uF 6.3V M	
C7508	NCB31CK-104X	C CAPACITOR	0.1uF 16V K	
C8001	NCB31HK-332X	C CAPACITOR	3300pF 50V K	
C8002	NCB31HK-332X	C CAPACITOR	3300pF 50V K	
C8003	NDC31HJ-471X	C CAPACITOR	470pF 50V J	
C8004	NDC31HJ-471X	C CAPACITOR	470pF 50V J	
C8005	NDC31HJ-471X	C CAPACITOR	470pF 50V J	
C8006	NDC31HJ-471X	C CAPACITOR	470pF 50V J	
C8007	QEKJ1CM-226Z	E CAPACITOR	22uF 16V M	
C8008	QEKJ1CM-226Z	E CAPACITOR	22uF 16V M	
C8009	NCB31HK-222X	C CAPACITOR	2200pF 50V K	
C8010	NCB31HK-222X	C CAPACITOR	2200pF 50V K	
C8051	QEKJ1CM-107Z	E CAPACITOR	100uF 16V M	
C8052	QEKJ1CM-107Z	E CAPACITOR	100uF 16V M	
R1	NRSA63J-622X	MG RESISTOR	6.2kΩ 1/16W J	
R2	NRSA63J-152X	MG RESISTOR	1.5kΩ 1/16W J	
R3	NRSA63J-472X	MG RESISTOR	4.7kΩ 1/16W J	A,B,C,D,E
R3	NRSA63J-101X	MG RESISTOR	100Ω 1/16W J	F,G
R4	NRSA63J-682X	MG RESISTOR	6.8kΩ 1/16W J	F,G
R11	NRSA63J-273X	MG RESISTOR	27kΩ 1/16W J	A,B,C,D,E
R11	NRSA63J-822X	MG RESISTOR	8.2kΩ 1/16W J	F,G
R12	NRSA63J-102X	MG RESISTOR	1kΩ 1/16W J	
R14	NRSA63J-182X	MG RESISTOR	1.8kΩ 1/16W J	F,G
R21	NRSA63J-222X	MG RESISTOR	2.2kΩ 1/16W J	
R22	NRSA63J-222X	MG RESISTOR	2.2kΩ 1/16W J	
R36	NRSA63J-472X	MG RESISTOR	4.7kΩ 1/16W J	
R37	NRSA63J-153X	MG RESISTOR	15kΩ 1/16W J	
R38	NRSA63J-685X	MG RESISTOR	6.8MΩ 1/16W J	
R201	NRSA63J-0R0X	MG RESISTOR	0Ω 1/16W J	
R202	NRSA63J-103X	MG RESISTOR	10kΩ 1/16W J	

MODEL	MARK	MODEL	MARK
HR-XV3EK	A	HR-XV31EX	E
HR-XV31EK	B	HR-XVS30EK	F
HR-XV32EK	C	HR-XVS30EX	G
HR-XV3EX	D		

⚠ Symbol No.	Part No.	Part Name	Description	Local
R208	NRSA63J-222X	MG RESISTOR	2.2kΩ 1/16W J	
R209	NRSA63J-682X	MG RESISTOR	6.8kΩ 1/16W J	
R210	NRSA63J-182X	MG RESISTOR	1.8kΩ 1/16W J	
R211	NRSA63J-562X	MG RESISTOR	5.6kΩ 1/16W J	
R212	NRSA63J-331X	MG RESISTOR	330Ω 1/16W J	F,G
R213	NRSA63J-0R0X	MG RESISTOR	0Ω 1/16W J	
R216	NRSA63J-103X	MG RESISTOR	10kΩ 1/16W J	
R223	NRSA63J-101X	MG RESISTOR	100Ω 1/16W J	F,G
R225	NRSA63J-332X	MG RESISTOR	3.3kΩ 1/16W J	F,G
R226	NRSA63J-102X	MG RESISTOR	1kΩ 1/16W J	
R501	NRSA63J-221X	MG RESISTOR	220Ω 1/16W J	F,G
R503	NRVA63D-152X	CMF RESISTOR	1.5kΩ 1/16W D	F,G
R504	NRVA63D-561X	CMF RESISTOR	560Ω 1/16W D	F,G
R505	NRVA63D-102X	CMF RESISTOR	1kΩ 1/16W D	F,G
R506	NRVA63D-392X	CMF RESISTOR	3.9kΩ 1/16W D	F,G
R507	NRVA63D-392X	CMF RESISTOR	3.9kΩ 1/16W D	F,G
R508	NRVA63D-102X	CMF RESISTOR	1kΩ 1/16W D	F,G
R510	NRSA63J-475X	MG RESISTOR	4.7MΩ 1/16W J	F,G
R511	NRSA63J-101X	MG RESISTOR	100Ω 1/16W J	F,G
R512	NRSA63J-471X	MG RESISTOR	470Ω 1/16W J	F,G
R2003	NRSA63J-101X	MG RESISTOR	100Ω 1/16W J	
R2005	NRSA63J-153X	MG RESISTOR	15kΩ 1/16W J	
R2007	NRSA63J-183X	MG RESISTOR	18kΩ 1/16W J	
R2008	NRSA63J-103X	MG RESISTOR	10kΩ 1/16W J	
R2010	NRSA63J-123X	MG RESISTOR	12kΩ 1/16W J	
R2013	NRSA63J-123X	MG RESISTOR	12kΩ 1/16W J	
R2014	NRSA63J-394X	MG RESISTOR	390kΩ 1/16W J	
R2015	NRSA63J-331X	MG RESISTOR	330Ω 1/16W J	
R2016	NRSA63J-393X	MG RESISTOR	39kΩ 1/16W J	
R2017	NRSA63J-183X	MG RESISTOR	18kΩ 1/16W J	
R2018	NRSA63J-472X	MG RESISTOR	4.7kΩ 1/16W J	
R2019	NRSA63J-472X	MG RESISTOR	4.7kΩ 1/16W J	
R2021	NRSA63J-333X	MG RESISTOR	33kΩ 1/16W J	
R2022	NRSA63J-103X	MG RESISTOR	10kΩ 1/16W J	
R2023	NRSA63J-103X	MG RESISTOR	10kΩ 1/16W J	
R2053	NRSA63J-392X	MG RESISTOR	3.9kΩ 1/16W J	
R2054	NRSA63J-123X	MG RESISTOR	12kΩ 1/16W J	
R2055	NRSA63J-3R3X	MG RESISTOR	3.3Ω 1/16W J	
R2056	QRE141J-560Y	C RESISTOR	56Ω 1/4W J	
R2057	NRSA63J-473X	MG RESISTOR	47kΩ 1/16W J	
R2058	NRSA63J-183X	MG RESISTOR	18kΩ 1/16W J	
R2059	NRSA63J-473X	MG RESISTOR	47kΩ 1/16W J	
R2060	NRSA63J-183X	MG RESISTOR	18kΩ 1/16W J	
R2201	NRSA63J-473X	MG RESISTOR	47kΩ 1/16W J	
R2202	NRSA63J-682X	MG RESISTOR	6.8kΩ 1/16W J	
R2203	NRSA63J-473X	MG RESISTOR	47kΩ 1/16W J	
R2204	NRSA63J-682X	MG RESISTOR	6.8kΩ 1/16W J	
R2205	NRSA63J-473X	MG RESISTOR	47kΩ 1/16W J	
R2206	NRSA63J-682X	MG RESISTOR	6.8kΩ 1/16W J	
R2207	NRSA63J-473X	MG RESISTOR	47kΩ 1/16W J	
R2208	NRSA63J-682X	MG RESISTOR	6.8kΩ 1/16W J	
R2209	NRSA63J-681X	MG RESISTOR	680Ω 1/16W J	
R2210	NRSA63J-472X	MG RESISTOR	4.7kΩ 1/16W J	
R2211	NRSA63J-272X	MG RESISTOR	2.7kΩ 1/16W J	
R2212	NRSA63J-272X	MG RESISTOR	2.7kΩ 1/16W J	
R2213	NRSA63J-472X	MG RESISTOR	4.7kΩ 1/16W J	
R2214	NRSA63J-681X	MG RESISTOR	680Ω 1/16W J	
R2215	NRSA63J-0R0X	MG RESISTOR	0Ω 1/16W J	
R2216	NRSA63J-122X	MG RESISTOR	1.2kΩ 1/16W J	
R2217	NRSA63J-472X	MG RESISTOR	4.7kΩ 1/16W J	
R2218	NRSA63J-332X	MG RESISTOR	3.3kΩ 1/16W J	
R2219	NRSA63J-122X	MG RESISTOR	1.2kΩ 1/16W J	
R2220	NRSA63J-102X	MG RESISTOR	1kΩ 1/16W J	
R2222	NRSA63J-472X	MG RESISTOR	4.7kΩ 1/16W J	
R2223	NRSA63J-511X	MG RESISTOR	510Ω 1/16W J	
R2224	NRSA63J-511X	MG RESISTOR	510Ω 1/16W J	
R2225	NRSA63J-472X	MG RESISTOR	4.7kΩ 1/16W J	
R2226	NRSA63J-273X	MG RESISTOR	27kΩ 1/16W J	
R2227	NRSA63J-393X	MG RESISTOR	39kΩ 1/16W J	
R2228	NRSA63J-273X	MG RESISTOR	27kΩ 1/16W J	
R2229	NRSA63J-393X	MG RESISTOR	39kΩ 1/16W J	
R2230	NRSA63J-392X	MG RESISTOR	3.9kΩ 1/16W J	
R2231	NRSA63J-471X	MG RESISTOR	470Ω 1/16W J	
R2232	NRSA63J-392X	MG RESISTOR	3.9kΩ 1/16W J	
R2233	NRSA63J-471X	MG RESISTOR	470Ω 1/16W J	
R2234	NRSA63J-101X	MG RESISTOR	100Ω 1/16W J	
R2235	NRSA63J-681X	MG RESISTOR	680Ω 1/16W J	
R2236	NRSA63J-272X	MG RESISTOR	2.7kΩ 1/16W J	

⚠ Symbol No.	Part No.	Part Name	Description	Local
R2237	NRSA63J-681X	MG RESISTOR	680Ω 1/16W J	
R2238	NRSA63J-272X	MG RESISTOR	2.7kΩ 1/16W J	
R2239	NRSA63J-471X	MG RESISTOR	470Ω 1/16W J	
R2240	NRSA63J-471X	MG RESISTOR	470Ω 1/16W J	
R2241	NRSA63J-473X	MG RESISTOR	47kΩ 1/16W J	
R2242	NRSA63J-682X	MG RESISTOR	6.8kΩ 1/16W J	
R2243	NRSA63J-473X	MG RESISTOR	47kΩ 1/16W J	
R2244	NRSA63J-682X	MG RESISTOR	6.8kΩ 1/16W J	
R2251	NRSA63J-472X	MG RESISTOR	4.7kΩ 1/16W J	
R2252	NRSA63J-221X	MG RESISTOR	220Ω 1/16W J	
R2253	NRSA63J-101X	MG RESISTOR	100Ω 1/16W J	
R2254	NRSA63J-103X	MG RESISTOR	10kΩ 1/16W J	F,G
R2255	NRSA63J-273X	MG RESISTOR	27kΩ 1/16W J	
R2256	NRSA63J-222X	MG RESISTOR	2.2kΩ 1/16W J	F,G
R3011	NRSA63J-102X	MG RESISTOR	1kΩ 1/16W J	
R3012	NRSA63J-102X	MG RESISTOR	1kΩ 1/16W J	
R3013	NRSA63J-102X	MG RESISTOR	1kΩ 1/16W J	
R3014	NRSA63J-102X	MG RESISTOR	1kΩ 1/16W J	
R3015	NRSA63J-102X	MG RESISTOR	1kΩ 1/16W J	
R3016	NRSA63J-102X	MG RESISTOR	1kΩ 1/16W J	
R3017	NRSA63J-102X	MG RESISTOR	1kΩ 1/16W J	
R3018	NRSA63J-682X	MG RESISTOR	6.8kΩ 1/16W J	
R3019	NRSA63J-102X	MG RESISTOR	1kΩ 1/16W J	
R3020	NRSA63J-102X	MG RESISTOR	1kΩ 1/16W J	
R3021	NRSA63J-102X	MG RESISTOR	1kΩ 1/16W J	
R3022	NRSA63J-102X	MG RESISTOR	1kΩ 1/16W J	
R3025	NRSA63J-472X	MG RESISTOR	4.7kΩ 1/16W J	
R3026	NRSA63J-472X	MG RESISTOR	4.7kΩ 1/16W J	
R3027	NRSA63J-472X	MG RESISTOR	4.7kΩ 1/16W J	
R3029	NRSA63J-102X	MG RESISTOR	1kΩ 1/16W J	
R3031	NRSA63J-102X	MG RESISTOR	1kΩ 1/16W J	
R3032	NRSA63J-102X	MG RESISTOR	1kΩ 1/16W J	
R3033	NRSA63J-0R0X	MG RESISTOR	0Ω 1/16W J	
R3035	NRSA63J-0R0X	MG RESISTOR	0Ω 1/16W J	
R3036	NRSA63J-472X	MG RESISTOR	4.7kΩ 1/16W J	
R3038	NRSA63J-152X	MG RESISTOR	1.5kΩ 1/16W J	
R3040	NRSA63J-472X	MG RESISTOR	4.7kΩ 1/16W J	
R3041	NRSA63J-0R0X	MG RESISTOR	0Ω 1/16W J	
R3042	NRSA63J-102X	MG RESISTOR	1kΩ 1/16W J	
R3044	NRSA63J-0R0X	MG RESISTOR	0Ω 1/16W J	
R3046	NRSA63J-102X	MG RESISTOR	1kΩ 1/16W J	
R3047	NRSA63J-102X	MG RESISTOR	1kΩ 1/16W J	
R3048	NRSA63J-102X	MG RESISTOR	1kΩ 1/16W J	
R3049	NRSA63J-0R0X	MG RESISTOR	0Ω 1/16W J	
R3050	NRSA63J-0R0X	MG RESISTOR	0Ω 1/16W J	
R3051	NRSA63J-102X	MG RESISTOR	1kΩ 1/16W J	
R3052	NRSA63J-471X	MG RESISTOR	470Ω 1/16W J	
R3053	NRSA63J-471X	MG RESISTOR	470Ω 1/16W J	
R3054	NRSA63J-102X	MG RESISTOR	1kΩ 1/16W J	
R3055	NRSA63J-102X	MG RESISTOR	1kΩ 1/16W J	
R3056	NRSA63J-102X	MG RESISTOR	1kΩ 1/16W J	
R3057	NRSA63J-0R0X	MG RESISTOR	0Ω 1/16W J	A,B,C,D,E
R3057	NRSA63J-102X	MG RESISTOR	1kΩ 1/16W J	F,G
R3058	NRSA63J-102X	MG RESISTOR	1kΩ 1/16W J	
R3059	NRSA63J-0R0X	MG RESISTOR	0Ω 1/16W J	
R3060	NRSA63J-0R0X	MG RESISTOR	0Ω 1/16W J	
R3062	NRSA63J-103X	MG RESISTOR	10kΩ 1/16W J	
R3063	NRSA63J-0R0X	MG RESISTOR	0Ω 1/16W J	
R3066	NRSA63J-472X	MG RESISTOR	4.7kΩ 1/16W J	
R3069	NRSA63J-101X	MG RESISTOR	100Ω 1/16W J	
R3071	NRSA63J-103X	MG RESISTOR	10kΩ 1/16W J	
R3072	NRSA63J-102X	MG RESISTOR	1kΩ 1/16W J	
R3073	NRSA63J-0R0X	MG RESISTOR	0Ω 1/16W J	
R3074	NRSA63J-0R0X	MG RESISTOR	0Ω 1/16W J	
R3075	NRSA63J-471X	MG RESISTOR	470Ω 1/16W J	
R3076	NRSA63J-471X	MG RESISTOR	470Ω 1/16W J	
R3077	NRSA63J-0R0X	MG RESISTOR	0Ω 1/16W J	
R3078	NRSA63J-0R0X	MG RESISTOR	0Ω 1/16W J	
R3079	NRSA63J-0R0X	MG RESISTOR	0Ω 1/16W J	
R3080	NRSA63J-102X	MG RESISTOR	1kΩ 1/16W J	
R3081	NRSA63J-0R0X	MG RESISTOR	0Ω 1/16W J	
R3083	NRSA63J-102X	MG RESISTOR	1kΩ 1/16W J	F,G
R3085	NRSA63J-0R0X	MG RESISTOR	0Ω 1/16W J	
R3086	NRSA63J-0R0X	MG RESISTOR	0Ω 1/16W J	
R3088	NRSA63J-0R0X	MG RESISTOR	0Ω 1/16W J	
R3090	NRSA63J-0R0X	MG RESISTOR	0Ω 1/16W J	
R3091	NRSA63J-0R0X	MG RESISTOR	0Ω 1/16W J	
R3094	NRSA63J-0R0X	MG RESISTOR	0Ω 1/16W J	

MODEL	MARK	MODEL	MARK
HR-XV3EK	A	HR-XV31EX	E
HR-XV31EK	B	HR-XVS30EK	F
HR-XV32EK	C	HR-XVS30EX	G
HR-XV3EX	D		

⚠ Symbol No.	Part No.	Part Name	Description	Local
R3096	NRSA63J-0R0X	MG RESISTOR	0Ω 1/16W J	
R3103	NRSA63J-0R0X	MG RESISTOR	0Ω 1/16W J	
R3104	NRSA63J-0R0X	MG RESISTOR	0Ω 1/16W J	
R3105	NRSA63J-0R0X	MG RESISTOR	0Ω 1/16W J	
R3106	NRSA63J-0R0X	MG RESISTOR	0Ω 1/16W J	F,G
R3205	QRE141J-181Y	C RESISTOR	180Ω 1/4W J	
R3206	NRSA63J-123X	MG RESISTOR	12kΩ 1/16W J	
R3207	NRSA63J-183X	MG RESISTOR	18kΩ 1/16W J	
R3208	NRSA63J-121X	MG RESISTOR	120Ω 1/16W J	
R3209	NRSA63J-183X	MG RESISTOR	18kΩ 1/16W J	
R3210	NRSA63J-121X	MG RESISTOR	120Ω 1/16W J	
R3211	NRSA63J-183X	MG RESISTOR	18kΩ 1/16W J	
R3212	NRSA63J-474X	MG RESISTOR	470kΩ 1/16W J	
R3213	NRSA63J-334X	MG RESISTOR	330kΩ 1/16W J	
R3214	NRSA63J-103X	MG RESISTOR	10kΩ 1/16W J	
R3215	NRSA63J-103X	MG RESISTOR	10kΩ 1/16W J	
R3216	NRSA63J-103X	MG RESISTOR	10kΩ 1/16W J	
R3217	NRSA63J-103X	MG RESISTOR	10kΩ 1/16W J	
R3218	NRSA63J-472X	MG RESISTOR	4.7kΩ 1/16W J	
R3219	NRSA63J-472X	MG RESISTOR	4.7kΩ 1/16W J	
R3220	NRSA63J-104X	MG RESISTOR	100kΩ 1/16W J	
R3222	NRSA63J-472X	MG RESISTOR	4.7kΩ 1/16W J	
R3223	NRSA63J-472X	MG RESISTOR	4.7kΩ 1/16W J	
R3224	NRSA63J-472X	MG RESISTOR	4.7kΩ 1/16W J	
R3225	NRSA63J-103X	MG RESISTOR	10kΩ 1/16W J	
R3229	NRSA63J-105X	MG RESISTOR	1MΩ 1/16W J	
R3230	NRSA63J-472X	MG RESISTOR	4.7kΩ 1/16W J	
R3231	NRSA63J-102X	MG RESISTOR	1kΩ 1/16W J	
R3233	NRSA63J-103X	MG RESISTOR	10kΩ 1/16W J	
R3234	NRSA63J-103X	MG RESISTOR	10kΩ 1/16W J	
R3235	NRSA63J-332X	MG RESISTOR	3.3kΩ 1/16W J	
R3236	NRSA63J-332X	MG RESISTOR	3.3kΩ 1/16W J	
R3237	NRSA63J-103X	MG RESISTOR	10kΩ 1/16W J	
R3241	NRSA63J-103X	MG RESISTOR	10kΩ 1/16W J	
R3242	NRSA63J-472X	MG RESISTOR	4.7kΩ 1/16W J	
R3253	NRSA63J-103X	MG RESISTOR	10kΩ 1/16W J	
R3301	NRSA63J-101X	MG RESISTOR	100Ω 1/16W J	
R3302	NRSA63J-101X	MG RESISTOR	100Ω 1/16W J	
R3303	NRSA63J-101X	MG RESISTOR	100Ω 1/16W J	
R3304	NRSA63J-101X	MG RESISTOR	100Ω 1/16W J	
R3305	NRSA63J-101X	MG RESISTOR	100Ω 1/16W J	
R3306	NRSA63J-182X	MG RESISTOR	1.8kΩ 1/16W J	
R3307	NRSA63J-182X	MG RESISTOR	1.8kΩ 1/16W J	
R3308	NRSA63J-182X	MG RESISTOR	1.8kΩ 1/16W J	
R3401	NRSA63J-101X	MG RESISTOR	100Ω 1/16W J	
R3402	NRSA63J-271X	MG RESISTOR	270Ω 1/16W J	
R4003	NRSA63J-561X	MG RESISTOR	560Ω 1/16W J	
R4004	NRSA63J-561X	MG RESISTOR	560Ω 1/16W J	
R4005	NRSA63J-562X	MG RESISTOR	5.6kΩ 1/16W J	
R4007	NRSA63J-102X	MG RESISTOR	1kΩ 1/16W J	
R4008	NRSA63J-102X	MG RESISTOR	1kΩ 1/16W J	
R4009	NRSA63J-102X	MG RESISTOR	1kΩ 1/16W J	
R4010	NRSA63J-103X	MG RESISTOR	10kΩ 1/16W J	
R4012	NRSA63J-222X	MG RESISTOR	2.2kΩ 1/16W J	
R4013	NRSA63J-0R0X	MG RESISTOR	0Ω 1/16W J	
R4015	NRSA63J-562X	MG RESISTOR	5.6kΩ 1/16W J	
R4017	NRSA63J-102X	MG RESISTOR	1kΩ 1/16W J	
R5303	NRSA63J-102X	MG RESISTOR	1kΩ 1/16W J	
R5304	NRSA63J-102X	MG RESISTOR	1kΩ 1/16W J	
R5311	NRSA63J-103X	MG RESISTOR	10kΩ 1/16W J	
R5312	NRSA63J-102X	MG RESISTOR	1kΩ 1/16W J	
R5313	NRSA63J-122X	MG RESISTOR	1.2kΩ 1/16W J	
R5314	NRSA63J-273X	MG RESISTOR	27kΩ 1/16W J	
R5315	NRSA63J-273X	MG RESISTOR	27kΩ 1/16W J	
R5316	QRE141J-181Y	C RESISTOR	180Ω 1/4W J	
R5322	QRE121J-681Y	C RESISTOR	680Ω 1/2W J	
R5323	QRE121J-561Y	C RESISTOR	560Ω 1/2W J	
R5324	NRSA63J-102X	MG RESISTOR	1kΩ 1/16W J	
R5326	NRSA63J-221X	MG RESISTOR	220Ω 1/16W J	
R6020	NRSA63J-102X	MG RESISTOR	1kΩ 1/16W J	
R6021	NRSA63J-102X	MG RESISTOR	1kΩ 1/16W J	
R6030	NRSA63J-332X	MG RESISTOR	3.3kΩ 1/16W J	
R6031	NRSA63J-101X	MG RESISTOR	100Ω 1/16W J	
R6032	NRSA63J-0R0X	MG RESISTOR	0Ω 1/16W J	
R6050	NRSA63J-0R0X	MG RESISTOR	0Ω 1/16W J	
R6052	NRSA63J-102X	MG RESISTOR	1kΩ 1/16W J	
R6053	NRSA63J-102X	MG RESISTOR	1kΩ 1/16W J	
R6080	NRSA63J-103X	MG RESISTOR	10kΩ 1/16W J	

⚠ Symbol No.	Part No.	Part Name	Description	Local
R6707	NRSA63J-330X	MG RESISTOR	33Ω 1/16W J	
R6708	NRSA63J-103X	MG RESISTOR	10kΩ 1/16W J	
R6709	NRSA63J-102X	MG RESISTOR	1kΩ 1/16W J	
R6710	NRSA63J-0R0X	MG RESISTOR	0Ω 1/16W J	
R6711	NRSA63J-104X	MG RESISTOR	100kΩ 1/16W J	
R6712	NRSA63J-102X	MG RESISTOR	1kΩ 1/16W J	
R6713	NRSA63J-123X	MG RESISTOR	12kΩ 1/16W J	
R6714	NRSA63J-102X	MG RESISTOR	1kΩ 1/16W J	
R6715	NRSA63J-123X	MG RESISTOR	12kΩ 1/16W J	
R6716	NRSA63J-470X	MG RESISTOR	47Ω 1/16W J	
R6720	NRSA63J-562X	MG RESISTOR	5.6kΩ 1/16W J	
R6721	NRSA63J-562X	MG RESISTOR	5.6kΩ 1/16W J	
R7103	NRVA63D-390X	CMF RESISTOR	39Ω 1/16W D	
R7104	NRSA63J-152X	MG RESISTOR	1.5kΩ 1/16W J	
R7105	NRVA63D-390X	CMF RESISTOR	39Ω 1/16W D	
R7106	NRSA63J-751X	MG RESISTOR	750Ω 1/16W J	
R7107	NRVA63D-390X	CMF RESISTOR	39Ω 1/16W D	
R7108	NRSA63J-751X	MG RESISTOR	750Ω 1/16W J	
R7109	NRVA63D-390X	CMF RESISTOR	39Ω 1/16W D	
R7110	NRSA63J-751X	MG RESISTOR	750Ω 1/16W J	
R7211	NRSA63J-101X	MG RESISTOR	100Ω 1/16W J	
R7507	NRSA63J-104X	MG RESISTOR	100kΩ 1/16W J	
R8001	NRSA63J-392X	MG RESISTOR	3.9kΩ 1/16W J	
R8002	NRSA63J-392X	MG RESISTOR	3.9kΩ 1/16W J	
R8003	NRSA63J-392X	MG RESISTOR	3.9kΩ 1/16W J	
R8004	NRSA63J-392X	MG RESISTOR	3.9kΩ 1/16W J	
R8005	NRSA63J-472X	MG RESISTOR	4.7kΩ 1/16W J	
R8006	NRSA63J-472X	MG RESISTOR	4.7kΩ 1/16W J	
R8007	NRSA63J-472X	MG RESISTOR	4.7kΩ 1/16W J	
R8008	NRSA63J-472X	MG RESISTOR	4.7kΩ 1/16W J	
R8009	NRSA63J-201X	MG RESISTOR	200Ω 1/16W J	
R8010	NRSA63J-201X	MG RESISTOR	200Ω 1/16W J	
R8011	NRSA63J-201X	MG RESISTOR	200Ω 1/16W J	
R8012	NRSA63J-201X	MG RESISTOR	200Ω 1/16W J	
R8013	NRSA63J-273X	MG RESISTOR	27kΩ 1/16W J	
R8014	NRSA63J-273X	MG RESISTOR	27kΩ 1/16W J	
R8015	NRSA63J-821X	MG RESISTOR	820Ω 1/16W J	
R8016	NRSA63J-821X	MG RESISTOR	820Ω 1/16W J	
R8017	NRSA63J-103X	MG RESISTOR	10kΩ 1/16W J	
R8018	NRSA63J-103X	MG RESISTOR	10kΩ 1/16W J	
R8051	QRE141J-221Y	C RESISTOR	220Ω 1/4W J	
R8052	QRE141J-221Y	C RESISTOR	220Ω 1/4W J	
R8054	NRSA63J-473X	MG RESISTOR	47kΩ 1/16W J	
VR2251	QVP0039-223Z	TRIM RESISTOR	22kΩ REC FM	F,G
L1	QQL071J-151Y	COIL	150uH J	F,G
L3	QQL29BJ-100Z	P COIL	10uH J	
L5	QQL29BJ-100Z	P COIL	10uH J	
L6	QQL29BJ-100Z	P COIL	10uH J	
L7	QQR0967-001	CHOKE COIL		
L10	QQL29BJ-100Z	P COIL	10uH J	
L201	QQL29BK-1R0Z	P COIL	1uH K	
L203	QQL37CJ-220Z	COIL	22uH J	
L204	QQL29BJ-100Z	P COIL	10uH J	
L206	QQL071J-220Y	COIL	22uH J	
L501	QQL29BJ-101Z	P COIL	100uH J	F,G
L502	QQL29BJ-100Z	P COIL	10uH J	F,G
L2251	QQL29BJ-100Z	P COIL	10uH J	
L2252	QQL29BJ-151Z	P COIL	150uH J	
L4001	QQL231J-1R0Y	COIL	1uH J	
L6001	QQL29BJ-100Z	P COIL	10uH J	
L6002	QQL29BK-1R0Z	P COIL	1uH K	
L6004	QQL29BK-1R0Z	P COIL	1uH K	
L6005	QQL29BJ-100Z	P COIL	10uH J	
L6701	QQL29BJ-3R3Z	P COIL	3.3uH J	
L6702	QQL29BJ-3R3Z	P COIL	3.3uH J	
L7101	QQL29BJ-100Z	P COIL	10uH J	F,G
L7502	QQL29BK-1R0Z	P COIL	1uH K	
T2051	PELN0832	OSC TRANS		
B1	NRSA63J-0R0X	MG RESISTOR	0Ω 1/16W J	A,B,C,D,E
B3	NRSA63J-0R0X	MG RESISTOR	0Ω 1/16W J	F,G
B4	NRSA63J-0R0X	MG RESISTOR	0Ω 1/16W J	
B7	NRSA63J-0R0X	MG RESISTOR	0Ω 1/16W J	
B206	NRSA63J-0R0X	MG RESISTOR	0Ω 1/16W J	A,B,C,D,E
B3301	NRSA63J-0R0X	MG RESISTOR	0Ω 1/16W J	
B3302	NRSA63J-0R0X	MG RESISTOR	0Ω 1/16W J	
B3303	NRSA63J-0R0X	MG RESISTOR	0Ω 1/16W J	

MODEL	MARK	MODEL	MARK
HR-XV3EK	A	HR-XV31EX	E
HR-XV31EK	B	HR-XVS30EK	F
HR-XV32EK	C	HR-XVS30EX	G
HR-XV3EX	D		

⚠ Symbol No.	Part No.	Part Name	Description	Local
B3304	NRSA63J-0R0X	MG RESISTOR	0Ω 1/16W J	
B3305	NRSA63J-0R0X	MG RESISTOR	0Ω 1/16W J	
B7101	NRSA63J-0R0X	MG RESISTOR	0Ω 1/16W J	A,B,C,D,E
B7102	NRSA63J-0R0X	MG RESISTOR	0Ω 1/16W J	
B7301	NRSA63J-0R0X	MG RESISTOR	0Ω 1/16W J	
B7302	NRSA63J-0R0X	MG RESISTOR	0Ω 1/16W J	
CN1	QGF1201C2-09	CONNECTOR	FFC/FPC (1-9)	
CN2001	QGF1207C1-06	CONNECTOR	FFC/FPC (1-6)	
CN2002	QGB2532J1-02	CONNECTOR	B-B (1-2)	
CN3001	QGB2032M4-12	CONNECTOR	B-B (1-12)	
CN3102	QGF1207C1-14	CONNECTOR	FFC/FPC (1-14)	
CN3103	QGF1207C1-14	CONNECTOR	FFC/FPC (1-14)	
CN5311	QGB1231M1-11	CONNECTOR	B-B (1-11)	
CN5313	QGB1231M1-11	CONNECTOR	B-B (1-11)	
CN7101	QGB2024K1-16S	CONNECTOR	B-B (1-16)	
CN7102	QGB2024K1-14S	CONNECTOR	B-B (1-14)	
CN7103	QGB2024K1-08S	CONNECTOR	B-B (1-8)	A,B,C,D,E
CN7103	QGB2024K1-12S	CONNECTOR	B-B (1-12)	F,G
CN7104	QGF1207C1-07	CONNECTOR	FFC/FPC (1-7)	A,B,C,D,E
CN7104	QGF1207C1-11	CONNECTOR	FFC/FPC (1-11)	F,G
CN7301	QGB2027MB-22	CONNECTOR	B-B (1-22)	
⚠ CP3002	NMFZ012-1R0X-M	FUSE	1A 50V	
⚠ CP4002	NMFZ012-1R0X-M	FUSE	1A 50V	
J7010	GP1FA352TZ	OPT TRANSMITTER		
J7202	QNS0100-001	3.5 JACK	R.PAUSE	
JS3001	QSW0954-003	ROTARY ENCODER		
K2001	NRSA63J-0R0X	MG RESISTOR	0Ω 1/16W J	
K2002	NRSA63J-0R0X	MG RESISTOR	0Ω 1/16W J	
K2003	NRSA63J-0R0X	MG RESISTOR	0Ω 1/16W J	
K2004	NRSA63J-0R0X	MG RESISTOR	0Ω 1/16W J	
K2253	NRSA63J-0R0X	MG RESISTOR	0Ω 1/16W J	
K6701	NQR0129-003X	FERRITE BEADS		
K6702	NQR0129-003X	FERRITE BEADS		
K6703	NQR0129-003X	FERRITE BEADS		
K6704	NQR0129-003X	FERRITE BEADS		
K6705	NQR0129-003X	FERRITE BEADS		
K6706	NQR0129-003X	FERRITE BEADS		
K7501	NQR0147-004X	FERRITE BEADS		
K7502	NQR0147-004X	FERRITE BEADS		
OT1	LP31158-001A	BOSS(MECHA) 1		
OT2	LP31185-001A	BOSS(MECHA) 2	(x2)	
S3001	QSW0602-004	PUSH SWITCH	REC.SAFETY	
S3002	QSW0602-004	PUSH SWITCH	S.CASSETTE	F,G
SD1	LP31179-001A	SHILD PLATE(PRE/REC)		
TU6001	QAU0323-001	TUNER		
W1	NRSA63J-0R0X	MG RESISTOR	0Ω 1/16W J	
W2	NRSA63J-0R0X	MG RESISTOR	0Ω 1/16W J	
W3	NRSA63J-0R0X	MG RESISTOR	0Ω 1/16W J	
W4	NRSA63J-0R0X	MG RESISTOR	0Ω 1/16W J	
W5	NRSA63J-0R0X	MG RESISTOR	0Ω 1/16W J	
W6	NRSA63J-0R0X	MG RESISTOR	0Ω 1/16W J	
W7	NRSA63J-0R0X	MG RESISTOR	0Ω 1/16W J	
W8	NRSA63J-0R0X	MG RESISTOR	0Ω 1/16W J	
W10	NRSA63J-0R0X	MG RESISTOR	0Ω 1/16W J	
W11	NRSA63J-0R0X	MG RESISTOR	0Ω 1/16W J	
W12	NRSA63J-0R0X	MG RESISTOR	0Ω 1/16W J	
W13	NRSA63J-0R0X	MG RESISTOR	0Ω 1/16W J	
W14	NRSA63J-0R0X	MG RESISTOR	0Ω 1/16W J	
W15	NRSA63J-0R0X	MG RESISTOR	0Ω 1/16W J	
W16	NRSA63J-0R0X	MG RESISTOR	0Ω 1/16W J	
W17	NRSA63J-0R0X	MG RESISTOR	0Ω 1/16W J	
W18	NRSA63J-0R0X	MG RESISTOR	0Ω 1/16W J	
W19	NRSA63J-0R0X	MG RESISTOR	0Ω 1/16W J	
W20	NRSA63J-0R0X	MG RESISTOR	0Ω 1/16W J	
W21	NRSA63J-0R0X	MG RESISTOR	0Ω 1/16W J	
W22	NRSA63J-0R0X	MG RESISTOR	0Ω 1/16W J	
W23	NRSA63J-0R0X	MG RESISTOR	0Ω 1/16W J	
W24	NRSA63J-0R0X	MG RESISTOR	0Ω 1/16W J	
W25	NRSA63J-0R0X	MG RESISTOR	0Ω 1/16W J	
W26	NRSA63J-0R0X	MG RESISTOR	0Ω 1/16W J	
W27	NRSA63J-0R0X	MG RESISTOR	0Ω 1/16W J	
W28	NRSA63J-0R0X	MG RESISTOR	0Ω 1/16W J	
W29	NRSA63J-0R0X	MG RESISTOR	0Ω 1/16W J	
W30	NRSA63J-0R0X	MG RESISTOR	0Ω 1/16W J	
W31	NRSA63J-0R0X	MG RESISTOR	0Ω 1/16W J	
W32	NRSA63J-0R0X	MG RESISTOR	0Ω 1/16W J	
W33	NRSA63J-0R0X	MG RESISTOR	0Ω 1/16W J	
W34	NRSA63J-0R0X	MG RESISTOR	0Ω 1/16W J	
W35	NRSA63J-0R0X	MG RESISTOR	0Ω 1/16W J	
W36	NRSA63J-0R0X	MG RESISTOR	0Ω 1/16W J	
W37	NRSA63J-0R0X	MG RESISTOR	0Ω 1/16W J	
W38	NRSA63J-0R0X	MG RESISTOR	0Ω 1/16W J	
W39	NRSA63J-0R0X	MG RESISTOR	0Ω 1/16W J	
W40	NRSA63J-0R0X	MG RESISTOR	0Ω 1/16W J	
W41	NRSA63J-0R0X	MG RESISTOR	0Ω 1/16W J	
W42	NRSA63J-0R0X	MG RESISTOR	0Ω 1/16W J	
W43	NRSA63J-0R0X	MG RESISTOR	0Ω 1/16W J	
W44	NRSA63J-0R0X	MG RESISTOR	0Ω 1/16W J	
W45	NRSA63J-0R0X	MG RESISTOR	0Ω 1/16W J	
W46	NRSA63J-0R0X	MG RESISTOR	0Ω 1/16W J	
W47	NRSA63J-0R0X	MG RESISTOR	0Ω 1/16W J	
W48	NRSA63J-0R0X	MG RESISTOR	0Ω 1/16W J	
W49	NRSA63J-0R0X	MG RESISTOR	0Ω 1/16W J	
W50	NRSA63J-0R0X	MG RESISTOR	0Ω 1/16W J	
W51	NRSA63J-0R0X	MG RESISTOR	0Ω 1/16W J	
W52	NRSA63J-0R0X	MG RESISTOR	0Ω 1/16W J	
W53	NRSA63J-0R0X	MG RESISTOR	0Ω 1/16W J	
W54	NRSA63J-0R0X	MG RESISTOR	0Ω 1/16W J	
W55	NRSA63J-0R0X	MG RESISTOR	0Ω 1/16W J	
W56	NRSA63J-0R0X	MG RESISTOR	0Ω 1/16W J	
W57	NRSA63J-0R0X	MG RESISTOR	0Ω 1/16W J	
W58	NRSA63J-0R0X	MG RESISTOR	0Ω 1/16W J	
W59	NRSA63J-0R0X	MG RESISTOR	0Ω 1/16W J	
W60	NRSA63J-0R0X	MG RESISTOR	0Ω 1/16W J	
W61	NRSA63J-0R0X	MG RESISTOR	0Ω 1/16W J	
W62	NRSA63J-0R0X	MG RESISTOR	0Ω 1/16W J	
W63	NRSA63J-0R0X	MG RESISTOR	0Ω 1/16W J	
W64	NRSA63J-0R0X	MG RESISTOR	0Ω 1/16W J	
W65	NRSA63J-0R0X	MG RESISTOR	0Ω 1/16W J	
W66	NRSA63J-0R0X	MG RESISTOR	0Ω 1/16W J	
W67	NRSA63J-0R0X	MG RESISTOR	0Ω 1/16W J	
W70	NRSA63J-0R0X	MG RESISTOR	0Ω 1/16W J	
W73	NRSA63J-0R0X	MG RESISTOR	0Ω 1/16W J	
W75	NRSA63J-0R0X	MG RESISTOR	0Ω 1/16W J	
W76	NRSA63J-0R0X	MG RESISTOR	0Ω 1/16W J	
W77	NRSA63J-0R0X	MG RESISTOR	0Ω 1/16W J	
WR1	QUB370-16A4A4	SIN TWIST WIRE		
WR2	QUB370-14A4A4	SIN TWIST WIRE		
X1	QAX0740-001	CRYSTAL	4.433619MHz	
X3001	QAX0445-001	CRYSTAL	32.768kHz	
X3002	QAX0527-001	CRYSTAL	10.000000MHz	
X6701	QAX0773-001Z	CRYSTAL	18.432000MHz	

2D DIGITAL BOARD ASSEMBLY <05>

⚠ Symbol No.	Part No.	Part Name	Description	Local
PW1	LPA10162-07A	2D DIGITAL BOARD ASSY		F,G
IC1201	JCP8036	IC		F,G
IC1201 or	JCP8057	IC		F,G
Q1201	2SC1317/RS/-T	TRANSISTOR		F,G
Q1202	2SA1576A/QR/-X	TRANSISTOR		F,G
Q1202 or	2PA1576/R/-X	TRANSISTOR		F,G
Q1203	2SA1576A/QR/-X	TRANSISTOR		F,G
Q1203 or	2PA1576/R/-X	TRANSISTOR		F,G
Q1204	2SC4081/QRS/-X	TRANSISTOR		F,G
Q1204 or	2PC4081/R/-X	TRANSISTOR		F,G
Q1205	2SC4081/S/-X	TRANSISTOR		F,G
D1201	RD4.3ES/B3/-T2	Z DIODE		F,G
C1201	QEKJ0JM-476Z	E CAPACITOR	47uF 6.3V M	F,G
C1208	NDC21HJ-101X	C CAPACITOR	100pF 50V J	F,G
C1210	NDC21HJ-330X	C CAPACITOR	33pF 50V J	F,G
C1211	QEKJ0JM-476Z	E CAPACITOR	47uF 6.3V M	F,G
C1212	NCB21HK-102X	C CAPACITOR	1000pF 50V K	F,G
C1213	NCF21EZ-104X	C CAPACITOR	0.1uF 25V Z	F,G
C1214	NCF21CZ-105X	C CAPACITOR	1uF 16V Z	F,G
C1215	QEKJ0JM-476Z	E CAPACITOR	47uF 6.3V M	F,G
C1216	NCF21EZ-104X	C CAPACITOR	0.1uF 25V Z	F,G
C1217	NCF21EZ-104X	C CAPACITOR	0.1uF 25V Z	F,G

MODEL	MARK	MODEL	MARK
HR-XV3EK	A	HR-XV31EX	E
HR-XV31EK	B	HR-XVS30EK	F
HR-XV32EK	C	HR-XVS30EX	G
HR-XV3EX	D		

⚠ Symbol No.	Part No.	Part Name	Description	Local
C1218	NCF21EZ-104X	C CAPACITOR	0.1uF 25V Z	F,G
C1219	NCF21CZ-105X	C CAPACITOR	1uF 16V Z	F,G
C1220	QEKJ0JM-476Z	E CAPACITOR	47uF 6.3V M	F,G
C1227	NCB21EK-104X	C CAPACITOR	0.1uF 25V K	F,G
C1228	QEKJ1EM-475Z	E CAPACITOR	4.7uF 25V M	F,G
C1229	NCB21HK-103X	C CAPACITOR	0.01uF 50V K	F,G
C1230	NCF21EZ-104X	C CAPACITOR	0.1uF 25V Z	F,G
C1231	NCF21EZ-104X	C CAPACITOR	0.1uF 25V Z	F,G
C1232	NCF21EZ-104X	C CAPACITOR	0.1uF 25V Z	F,G
C1233	QDYB1CM-103Y	C CAPACITOR	0.01uF 16V M	F,G
C1234	NCF21EZ-104X	C CAPACITOR	0.1uF 25V Z	F,G
C1235	QEKJ0JM-476Z	E CAPACITOR	47uF 6.3V M	F,G
C1236	NCF21EZ-104X	C CAPACITOR	0.1uF 25V Z	F,G
C1237	NCF21EZ-104X	C CAPACITOR	0.1uF 25V Z	F,G
C1243	NCB21HK-103X	C CAPACITOR	0.01uF 50V K	F,G
C1244	QEKJ1EM-475Z	E CAPACITOR	4.7uF 25V M	F,G
C1246	QEKJ0JM-476Z	E CAPACITOR	47uF 6.3V M	F,G
R1201	NRSA02J-121X	MG RESISTOR	120Ω 1/10W J	F,G
R1202	NRSA02J-101X	MG RESISTOR	100Ω 1/10W J	F,G
R1203	NRSA02J-221X	MG RESISTOR	220Ω 1/10W J	F,G
R1204	NRSA02J-221X	MG RESISTOR	220Ω 1/10W J	F,G
R1205	NRSA02J-102X	MG RESISTOR	1kΩ 1/10W J	F,G
R1206	NRSA02J-561X	MG RESISTOR	560Ω 1/10W J	F,G
R1207	NRSA02J-562X	MG RESISTOR	5.6kΩ 1/10W J	F,G
R1208	NRSA02J-123X	MG RESISTOR	12kΩ 1/10W J	F,G
R1209	NRSA02J-180X	MG RESISTOR	18Ω 1/10W J	F,G
R1210	NRVA02D-393X	CMF RESISTOR	39kΩ 1/10W D	F,G
R1211	NRVA02D-153X	CMF RESISTOR	15kΩ 1/10W D	F,G
R1212	NRSA02J-102X	MG RESISTOR	1kΩ 1/10W J	F,G
R1214	NRSA02J-910X	MG RESISTOR	91Ω 1/10W J	F,G
R1215	NRSA02J-102X	MG RESISTOR	1kΩ 1/10W J	F,G
R1217	NRVA02D-750X	CMF RESISTOR	75Ω 1/10W D	F,G
R1218	NRVA02D-301X	CMF RESISTOR	300Ω 1/10W D	F,G
R1220	NRSA02J-0R0X	MG RESISTOR	0Ω 1/10W J	F,G
R1222	NRSA02J-471X	MG RESISTOR	470Ω 1/10W J	F,G
R1224	NRSA02J-561X	MG RESISTOR	560Ω 1/10W J	F,G
L1201	QQL071J-1R0Y	COIL	1uH J	F,G
L1202	QRE141J-181Y	C RESISTOR	180Ω 1/4W J	F,G
L1203	QQL29BJ-331Z	P COIL	330uH J	F,G
L1204	QQL29BJ-221Z	P COIL	220uH J	F,G
L1207	QQL29BJ-221Z	P COIL	220uH J	F,G
BK1	LP40425-001A	BRACKET(PWB)		F,G
CN1201	QGG2502K1-12	CONNECTOR	(1-12)	F,G
LC1201	QQL29BJ-101Z	P COIL	100uH J	F,G
SD1	LP31098-001B	SHIELD CASE(DEG)		F,G
W1251	NRSA02J-0R0X	MG RESISTOR	0Ω 1/10W J	F,G

TERMINAL BOARD ASSEMBLY <06>

⚠ Symbol No.	Part No.	Part Name	Description	Local
PW1	LPA10216-02B	TERMINAL BOARD ASSY		A,B,C,D,E
PW1	LPA10216-01B	TERMINAL BOARD ASSY		F,G
IC901	HA118226F	IC		
IC902	BA7623F-X	SOP IC		
IC903	BA7623F-X	SOP IC		F,G
Q901	2SC2412K/QRS/-X	TRANSISTOR		
Q901 or	2SD601A/QRS/-X	TRANSISTOR		
Q901 or	2SC3928A/QRS/-X	TRANSISTOR		
Q902	2SC2412K/QRS/-X	TRANSISTOR		
Q902 or	2SD601A/QRS/-X	TRANSISTOR		
Q902 or	2SC3928A/QRS/-X	TRANSISTOR		
Q903	DTC144WKA-X	DIGI TRANSISTOR		
Q903 or	UN221E-X	TRANSTSTOR		
Q904	DTC144WKA-X	DIGI TRANSISTOR		
Q904 or	UN221E-X	TRANSTSTOR		
Q907	2SA1037AK/QR/-X	TRANSISTOR		
Q907 or	2SB709A/QR/-X	TRANSISTOR		
Q907 or	2SA1530A/QR/-X	TRANSISTOR		
Q908	2SA1037AK/QR/-X	TRANSISTOR		
Q908 or	2SB709A/QR/-X	TRANSISTOR		
Q908 or	2SA1530A/QR/-X	TRANSISTOR		
Q912	2SA1037AK/QR/-X	TRANSISTOR		
Q912 or	2SB709A/QR/-X	TRANSISTOR		
Q912 or	2SA1530A/QR/-X	TRANSISTOR		
Q913	2SA1037AK/QR/-X	TRANSISTOR		
Q913 or	2SB709A/QR/-X	TRANSISTOR		
Q913 or	2SA1530A/QR/-X	TRANSISTOR		
Q917	2SC2412K/QRS/-X	TRANSISTOR		
Q917 or	2SD601A/QRS/-X	TRANSISTOR		
Q917 or	2SC3928A/QRS/-X	TRANSISTOR		
Q918	2SC2412K/QRS/-X	TRANSISTOR		
Q918 or	2SD601A/QRS/-X	TRANSISTOR		
Q918 or	2SC3928A/QRS/-X	TRANSISTOR		
Q919	DTA144WKA-X	TRANSISTOR		
Q919 or	UN211E-X	DIGI TRANSISTOR		
Q932	2SA1037AK/QR/-X	TRANSISTOR		
Q932 or	2SB709A/QR/-X	TRANSISTOR		
Q932 or	2SA1530A/QR/-X	TRANSISTOR		
Q933	2SA1037AK/QR/-X	TRANSISTOR		
Q933 or	2SB709A/QR/-X	TRANSISTOR		
Q933 or	2SA1530A/QR/-X	TRANSISTOR		
D902	QRE141J-181Y	C RESISTOR	180Ω 1/4W J	
D904	MTZJ9.1B-T2	Z DIODE		
D904 or	RD9.1ES/B2/-T2	Z DIODE		
C901	QEKJ0JM-337Z	E CAPACITOR	330uF 6.3V M	
C902	NDC31HJ-331X	C CAPACITOR	330pF 50V J	
C903	NDC31HJ-331X	C CAPACITOR	330pF 50V J	
C904	NDC31HJ-331X	C CAPACITOR	330pF 50V J	
C905	NDC31HJ-331X	C CAPACITOR	330pF 50V J	
C906	NCB31HK-471X	C CAPACITOR	470pF 50V K	
C907	NCB31HK-471X	C CAPACITOR	470pF 50V K	
C908	NCB31HK-471X	C CAPACITOR	470pF 50V K	
C909	NCB31HK-471X	C CAPACITOR	470pF 50V K	
C914	QEKJ0JM-337Z	E CAPACITOR	330uF 6.3V M	
C915	QEKJ0JM-337Z	E CAPACITOR	330uF 6.3V M	
C916	QEKJ0JM-337Z	E CAPACITOR	330uF 6.3V M	
C917	QEKJ0JM-337Z	E CAPACITOR	330uF 6.3V M	
C918	NDC31HJ-331X	C CAPACITOR	330pF 50V J	
C919	NDC31HJ-331X	C CAPACITOR	330pF 50V J	
C920	NDC31HJ-331X	C CAPACITOR	330pF 50V J	
C921	NDC31HJ-331X	C CAPACITOR	330pF 50V J	
C922	NCB31HK-471X	C CAPACITOR	470pF 50V K	
C923	NCB31HK-471X	C CAPACITOR	470pF 50V K	
C924	NCB31HK-471X	C CAPACITOR	470pF 50V K	
C925	NCB31HK-471X	C CAPACITOR	470pF 50V K	
C930	NCB31HK-103X	C CAPACITOR	0.01uF 50V K	
C932	QEKJ1HM-105Z	E CAPACITOR	1uF 50V M	
C934	NCB31HK-103X	C CAPACITOR	0.01uF 50V K	F,G
C936	QEKJ1HM-104Z	E CAPACITOR	0.1uF 50V M	F,G
C937	QEKJ1EM-106Z	E CAPACITOR	10uF 25V M	
C939	QEKJ1HM-105Z	E CAPACITOR	1uF 50V M	
C940	QEKJ1HM-105Z	E CAPACITOR	1uF 50V M	
C941	QEKJ1HM-105Z	E CAPACITOR	1uF 50V M	
C942	QEKJ1HM-475Z	E CAPACITOR	4.7uF 50V M	
C943	QEKJ1HM-105Z	E CAPACITOR	1uF 50V M	
C944	QEKJ1CM-476Z	E CAPACITOR	47uF 16V M	
C945	QEKJ1HM-105Z	E CAPACITOR	1uF 50V M	
C946	QEKJ1HM-105Z	E CAPACITOR	1uF 50V M	
C947	QEKJ1HM-105Z	E CAPACITOR	1uF 50V M	
C948	QEKJ1EM-106Z	E CAPACITOR	10uF 25V M	
C949	QEKJ1EM-106Z	E CAPACITOR	10uF 25V M	
C950	QEKJ1HM-105Z	E CAPACITOR	1uF 50V M	
C951	QEKJ1HM-105Z	E CAPACITOR	1uF 50V M	
C952	QEKJ1HM-105Z	E CAPACITOR	1uF 50V M	
C953	QEPF1HM-105Z	E CAPACITOR	1uF 50V M	
C954	QEKJ1HM-105Z	E CAPACITOR	1uF 50V M	
C955	QEKJ1HM-105Z	E CAPACITOR	1uF 50V M	
C956	QEKJ0JM-476Z	E CAPACITOR	47uF 6.3V M	
C957	NDC31HJ-101X	C CAPACITOR	100pF 50V J	
C960	NCB31HK-103X	C CAPACITOR	0.01uF 50V K	
C961	QEKJ0JM-476Z	E CAPACITOR	47uF 6.3V M	
C962	NCB31HK-103X	C CAPACITOR	0.01uF 50V K	
C963	QEKJ1CM-476Z	E CAPACITOR	47uF 16V M	
C964	NCB31HK-103X	C CAPACITOR	0.01uF 50V K	
C965	NCB31HK-103X	C CAPACITOR	0.01uF 50V K	

MODEL	MARK	MODEL	MARK
HR-XV3EK	A	HR-XV31EX	E
HR-XV31EK	B	HR-XVS30EK	F
HR-XV32EK	C	HR-XVS30EX	G
HR-XV3EX	D		

⚠ Symbol No.	Part No.	Part Name	Description	Local
C966	QEKJ0JM-476Z	E CAPACITOR	47uF 6.3V M	
C980	QDYB1CM-103Y	C CAPACITOR	0.01uF 16V M	F,G
C981	QEKJ0JM-337Z	E CAPACITOR	330uF 6.3V M	F,G
C982	QEKJ0JM-337Z	E CAPACITOR	330uF 6.3V M	F,G
C983	QEKJ0JM-337Z	E CAPACITOR	330uF 6.3V M	F,G
C996	NCB31HK-103X	C CAPACITOR	0.01uF 50V K	
C997	NCB31HK-103X	C CAPACITOR	0.01uF 50V K	
C7706	NCB31HK-102X	C CAPACITOR	1000pF 50V K	
C7708	NCB31HK-102X	C CAPACITOR	1000pF 50V K	
R901	NRSA63J-103X	MG RESISTOR	10kΩ 1/16W J	
R902	NRSA63J-223X	MG RESISTOR	22kΩ 1/16W J	
R903	NRSA63J-183X	MG RESISTOR	18kΩ 1/16W J	
R904	NRSA63J-474X	MG RESISTOR	470kΩ 1/16W J	
R909	NRSA63J-750X	MG RESISTOR	75Ω 1/16W J	
R910	NRSA63J-750X	MG RESISTOR	75Ω 1/16W J	
R911	NRSA63J-750X	MG RESISTOR	75Ω 1/16W J	
R912	NRSA63J-750X	MG RESISTOR	75Ω 1/16W J	
R913	NRSA63J-750X	MG RESISTOR	75Ω 1/16W J	
R914	NRSA63J-101X	MG RESISTOR	100Ω 1/16W J	
R915	NRSA63J-101X	MG RESISTOR	100Ω 1/16W J	
R916	QQL231J-100Y	COIL	10uH J	
R917	QQL231J-100Y	COIL	10uH J	
R918	NRSA63J-102X	MG RESISTOR	1kΩ 1/16W J	
R919	QRE141J-131Y	C RESISTOR	130Ω 1/4W J	
R920	NRSA63J-0R0X	MG RESISTOR	0Ω 1/16W J	
R921	NRSA63J-102X	MG RESISTOR	1kΩ 1/16W J	
R922	NRSA63J-750X	MG RESISTOR	75Ω 1/16W J	
R923	NRSA63J-750X	MG RESISTOR	75Ω 1/16W J	
R924	NRSA63D-750X	MG RESISTOR	75Ω 1/16W D	
R925	NRSA63D-750X	MG RESISTOR	75Ω 1/16W D	
R926	NRSA63D-750X	MG RESISTOR	75Ω 1/16W D	
R927	NRSA63J-101X	MG RESISTOR	100Ω 1/16W J	
R928	NRSA63J-101X	MG RESISTOR	100Ω 1/16W J	
R929	QQL231J-101Y	COIL	100uH J	
R930	QQL231J-101Y	COIL	100uH J	
R937	QRE141J-101Y	C RESISTOR	100Ω 1/4W J	
R939	NRSA63J-101X	MG RESISTOR	100Ω 1/16W J	
R940	NRSA63J-101X	MG RESISTOR	100Ω 1/16W J	
R941	NRSA63J-0R0X	MG RESISTOR	0Ω 1/16W J	
R942	NRSA63J-0R0X	MG RESISTOR	0Ω 1/16W J	
R943	NRSA63J-0R0X	MG RESISTOR	0Ω 1/16W J	
R944	QRE121J-331Y	C RESISTOR	330Ω 1/2W J	
R945	QRE121J-331Y	C RESISTOR	330Ω 1/2W J	
R949	NRSA63J-103X	MG RESISTOR	10kΩ 1/16W J	
R950	NRSA63J-103X	MG RESISTOR	10kΩ 1/16W J	
R951	NRSA63J-222X	MG RESISTOR	2.2kΩ 1/16W J	
R952	NRSA63J-222X	MG RESISTOR	2.2kΩ 1/16W J	
R960	NRSA63J-221X	MG RESISTOR	220Ω 1/16W J	
R961	NRSA63J-221X	MG RESISTOR	220Ω 1/16W J	
R968	NRSA63J-0R0X	MG RESISTOR	0Ω 1/16W J	F,G
R969	NRSA63J-0R0X	MG RESISTOR	0Ω 1/16W J	F,G
R970	NRSA63J-0R0X	MG RESISTOR	0Ω 1/16W J	F,G
R990	NRSA63J-273X	MG RESISTOR	27kΩ 1/16W J	
R991	NRSA63J-473X	MG RESISTOR	47kΩ 1/16W J	
R992	NRSA63J-102X	MG RESISTOR	1kΩ 1/16W J	
R993	NRSA63J-393X	MG RESISTOR	39kΩ 1/16W J	
R994	NRSA63J-103X	MG RESISTOR	10kΩ 1/16W J	
R999	NRSA63J-103X	MG RESISTOR	10kΩ 1/16W J	
R7710	NRSA63J-0R0X	MG RESISTOR	0Ω 1/16W J	
R7711	NRSA63J-0R0X	MG RESISTOR	0Ω 1/16W J	
R7739	NRSA63D-750X	MG RESISTOR	75Ω 1/16W D	F,G
R7740	NRSA63D-750X	MG RESISTOR	75Ω 1/16W D	F,G
R7741	NRSA63D-750X	MG RESISTOR	75Ω 1/16W D	F,G
L901	QQL071J-4R7Y	COIL	4.7uH J	
L902	QQL071J-4R7Y	COIL	4.7uH J	
L903	QQL071J-1R0Y	COIL	1uH J	
L904	QQL071J-4R7Y	COIL	4.7uH J	
L905	QQL071J-4R7Y	COIL	4.7uH J	
L906	QQL071J-4R7Y	COIL	4.7uH J	
L907	QQL071J-4R7Y	COIL	4.7uH J	
L908	QQL231J-R22Y	COIL	0.22uH J	
L909	QQL071J-4R7Y	COIL	4.7uH J	
L910	QQL071J-4R7Y	COIL	4.7uH J	
L911	QQL29BJ-100Z	P COIL	10uH J	
L914	QQL071J-1R0Y	COIL	1uH J	
L917	QQL29BJ-100Z	P COIL	10uH J	
L918	QQL29BJ-100Z	P COIL	10uH J	
L919	QQL29BJ-100Z	P COIL	10uH J	
L7703	QQL071J-150Y	COIL	15uH J	
L7704	QQL071J-150Y	COIL	15uH J	
B903	NRSA63J-0R0X	MG RESISTOR	0Ω 1/16W J	
CN913	QGB2024J1-14S	CONNECTOR	B-B (1-14)	
CN914	QGB2024J1-16S	CONNECTOR	B-B (1-16)	
CN915	QGB2024J1-08S	CONNECTOR	B-B (1-8)	A,B,C,D,E
CN915	QGB2024J1-12S	CONNECTOR	B-B (1-12)	F,G
J901	QNZ0627-001	21P CONNECTOR	AV1	
J902	QNZ0627-001	21P CONNECTOR	AV2	
J7005	QNN0599-002	PIN JACK	CY/PB/PR	F,G
J7007	QNN0295-002	PIN JACK	AV.OUT	
TB1	QNZ0431-001Z	EARTH TERMINAL		
W1	NRSA63J-0R0X	MG RESISTOR	0Ω 1/16W J	
W2	NRSA63J-0R0X	MG RESISTOR	0Ω 1/16W J	
W3	NRSA63J-0R0X	MG RESISTOR	0Ω 1/16W J	
W4	NRSA63J-0R0X	MG RESISTOR	0Ω 1/16W J	
W5	NRSA63J-0R0X	MG RESISTOR	0Ω 1/16W J	
W6	NRSA63J-0R0X	MG RESISTOR	0Ω 1/16W J	
W7	NRSA63J-0R0X	MG RESISTOR	0Ω 1/16W J	
W8	NRSA63J-0R0X	MG RESISTOR	0Ω 1/16W J	
W9	NRSA63J-0R0X	MG RESISTOR	0Ω 1/16W J	
W10	NRSA63J-0R0X	MG RESISTOR	0Ω 1/16W J	
W11	NRSA63J-0R0X	MG RESISTOR	0Ω 1/16W J	
W12	NRSA63J-0R0X	MG RESISTOR	0Ω 1/16W J	
W13	NRSA63J-0R0X	MG RESISTOR	0Ω 1/16W J	
W14	NRSA63J-0R0X	MG RESISTOR	0Ω 1/16W J	

A/C HEAD BOARD ASSEMBLY <12>

⚠ Symbol No.	Part No.	Part Name	Description	Local
PW1	LPA10158-01A1	A/C HEAD BOARD ASSY		

DISPLAY BOARD ASSEMBLY <28>

⚠ Symbol No.	Part No.	Part Name	Description	Local
PW1	LPA10206-11C2	DISPLAY BOARD ASSY		A,C,D
PW1	LPA10206-14B2	DISPLAY BOARD ASSY		B,E
PW1	LPA10206-09C2	DISPLAY BOARD ASSY		F,G
IC7001	MN101C35DJD	IC(MCU)		
IC7001 or	MN101CP35DJD	IC(MCU)		
IC7002	GP1UM281XK	IR DETECT UNIT	38kHz	
IC7002 or	PNA4652M00XB	IR DETECT UNIT	38kHz	
IC7003	SN74HCT08APW-X	IC		
Q7003	DTC143EKA-X	DIGI TRANSISTOR		A,C,D,F,G
Q7003 or	UN221L-X	DIGI TRANSISTOR		A,C,D,F,G
Q7004	DTC143EKA-X	DIGI TRANSISTOR		A,C,D,F,G
Q7004 or	UN221L-X	DIGI TRANSISTOR		A,C,D,F,G
D7002	SLR-325MC-T	LED		
D7002 or	LTL-816GE-T	LED		
D7003	SLA-580BC3T3F	LED		A,C,D,F,G
D7021	RD6.8ES/B1/-T2	Z DIODE		
D7021 or	MTZJ6.8A-T2	Z DIODE		
C7001	QEKJ0JM-107Z	E CAPACITOR	100uF 6.3V M	
C7002	NCF21EZ-104X	C CAPACITOR	0.1uF 25V Z	
C7003	QEKJ1HM-106Z	E CAPACITOR	10uF 50V M	
C7008	NCF21EZ-104X	C CAPACITOR	0.1uF 25V Z	
C7009	NCF21EZ-104X	C CAPACITOR	0.1uF 25V Z	
C7011	QEKJ0JM-476Z	E CAPACITOR	47uF 6.3V M	
C7017	NCF21EZ-104X	C CAPACITOR	0.1uF 25V Z	
R7001	NRSA02J-102X	MG RESISTOR	1kΩ 1/10W J	
R7002	NRSA02J-102X	MG RESISTOR	1kΩ 1/10W J	
R7003	NRSA02J-102X	MG RESISTOR	1kΩ 1/10W J	

MODEL	MARK	MODEL	MARK
HR-XV3EK	A	HR-XV31EX	E
HR-XV31EK	B	HR-XVS30EK	F
HR-XV32EK	C	HR-XVS30EX	G
HR-XV3EX	D		

⚠ Symbol No.	Part No.	Part Name	Description	Local
R7005	QRE141J-103Y	C RESISTOR	10kΩ 1/4W J	
R7006	NRSA02J-0R0X	MG RESISTOR	0Ω 1/10W J	
R7007	NRSA02J-103X	MG RESISTOR	10kΩ 1/10W J	
R7010	NRSA02J-103X	MG RESISTOR	10kΩ 1/10W J	
R7011	QRE141J-122Y	C RESISTOR	1.2kΩ 1/4W J	
R7012	NRSA02J-182X	MG RESISTOR	1.8kΩ 1/10W J	
R7013	NRSA02J-222X	MG RESISTOR	2.2kΩ 1/10W J	
R7014	NRSA02J-272X	MG RESISTOR	2.7kΩ 1/10W J	
R7015	QRE141J-472Y	C RESISTOR	4.7kΩ 1/4W J	
R7020	NRSA02J-103X	MG RESISTOR	10kΩ 1/10W J	
R7021	QRE141J-122Y	C RESISTOR	1.2kΩ 1/4W J	
R7022	NRSA02J-182X	MG RESISTOR	1.8kΩ 1/10W J	
R7023	NRSA02J-222X	MG RESISTOR	2.2kΩ 1/10W J	
R7024	NRSA02J-272X	MG RESISTOR	2.7kΩ 1/10W J	
R7026	NRSA02J-102X	MG RESISTOR	1kΩ 1/10W J	
R7029	NRSA02J-470X	MG RESISTOR	47Ω 1/10W J	A,C,D,F,G
R7033	QRE141J-222Y	C RESISTOR	2.2kΩ 1/4W J	
R7034	QRE141J-222Y	C RESISTOR	2.2kΩ 1/4W J	
R7035	NRSA02J-182X	MG RESISTOR	1.8kΩ 1/10W J	
R7036	QRE141J-102Y	C RESISTOR	1kΩ 1/4W J	
R7037	NRSA02J-102X	MG RESISTOR	1kΩ 1/10W J	
R7039	NRSA02J-102X	MG RESISTOR	1kΩ 1/10W J	
R7040	NRSA02J-102X	MG RESISTOR	1kΩ 1/10W J	
R7041	NRSA02J-102X	MG RESISTOR	1kΩ 1/10W J	
R7042	NRSA02J-102X	MG RESISTOR	1kΩ 1/10W J	
R7044	NRSA02J-102X	MG RESISTOR	1kΩ 1/10W J	
R7046	NRSA02J-102X	MG RESISTOR	1kΩ 1/10W J	
R7048	NRSA02J-221X	MG RESISTOR	220Ω 1/10W J	
R7051	NRSA02J-221X	MG RESISTOR	220Ω 1/10W J	
R7052	NRSA02J-104X	MG RESISTOR	100kΩ 1/10W J	
R7053	NRSA02J-104X	MG RESISTOR	100kΩ 1/10W J	
R7054	NRSA02J-104X	MG RESISTOR	100kΩ 1/10W J	
R7055	NRSA02J-104X	MG RESISTOR	100kΩ 1/10W J	
R7056	NRSA02J-104X	MG RESISTOR	100kΩ 1/10W J	
R7057	NRSA02J-104X	MG RESISTOR	100kΩ 1/10W J	
R7058	NRSA02J-104X	MG RESISTOR	100kΩ 1/10W J	
R7059	NRSA02J-104X	MG RESISTOR	100kΩ 1/10W J	
R7060	NRSA02J-104X	MG RESISTOR	100kΩ 1/10W J	
R7061	NRSA02J-104X	MG RESISTOR	100kΩ 1/10W J	
R7062	NRSA02J-104X	MG RESISTOR	100kΩ 1/10W J	
R7063	NRSA02J-104X	MG RESISTOR	100kΩ 1/10W J	
R7064	NRSA02J-104X	MG RESISTOR	100kΩ 1/10W J	
R7077	NRSA02J-104X	MG RESISTOR	100kΩ 1/10W J	
R7078	NRSA02J-104X	MG RESISTOR	100kΩ 1/10W J	
R7079	NRSA02J-104X	MG RESISTOR	100kΩ 1/10W J	
R7080	NRSA02J-104X	MG RESISTOR	100kΩ 1/10W J	
R7081	NRSA02J-104X	MG RESISTOR	100kΩ 1/10W J	
R7082	NRSA02J-104X	MG RESISTOR	100kΩ 1/10W J	
R7083	NRSA02J-104X	MG RESISTOR	100kΩ 1/10W J	
R7084	NRSA02J-104X	MG RESISTOR	100kΩ 1/10W J	
R7085	NRSA02J-104X	MG RESISTOR	100kΩ 1/10W J	
R7086	NRSA02J-104X	MG RESISTOR	100kΩ 1/10W J	
R7087	NRSA02J-104X	MG RESISTOR	100kΩ 1/10W J	
R7088	NRSA02J-104X	MG RESISTOR	100kΩ 1/10W J	
R7089	NRSA02J-104X	MG RESISTOR	100kΩ 1/10W J	
R7090	NRSA02J-104X	MG RESISTOR	100kΩ 1/10W J	
R7091	NRSA02J-104X	MG RESISTOR	100kΩ 1/10W J	
R7099	QRE141J-182Y	C RESISTOR	1.8kΩ 1/4W J	B,E
CN7003	QGF1201F2-14	CONNECTOR	FFC/FPC (1-14)	
CN7004	QGF1201F2-14	CONNECTOR	FFC/FPC (1-14)	
DI7001	QLF0123-001	FL TUBE		
FW7002	QUM023-06A4A4	PARA RIBON WIRE		B,E
FW7002	QUM025-06A4A4	PARA RIBON WIRE		A,C,D,F,G
HD1	PQ34949-1-1	FDP HOLDER(L)		
HD2	PQ34950-1-1	FDP HOLDER(R)		
S7001	QSW0456-002Z	TACT SWITCH	OPEN	
S7002	QSW0456-002Z	TACT SWITCH	SAT CONTROL	
S7003	QSW0456-002Z	TACT SWITCH	CH+	
S7004	QSW0456-002Z	TACT SWITCH	FF	
S7005	QSW0456-002Z	TACT SWITCH	REW	
S7006	QSW0456-002Z	TACT SWITCH	REC	
S7010	QSW0456-002Z	TACT SWITCH	CH-	
S7011	QSW0456-002Z	TACT SWITCH	PLAY	B,E
S7012	QSW0456-002Z	TACT SWITCH	STOP	B,E
S7013	QSW0456-002Z	TACT SWITCH	VHS/DVD	
S7016	QSW0456-002Z	TACT SWITCH	PLAY	A,C,D,F,G
S7017	QSW0456-002Z	TACT SWITCH	STOP	A,C,D,F,G

⚠ Symbol No.	Part No.	Part Name	Description	Local
X7001	QAX0246-001Z	C RESONATOR	8.00MHz	

JACK BOARD ASSEMBLY <36>

⚠ Symbol No.	Part No.	Part Name	Description	Local
PW1	LPA10206-11C3	JACK BOARD ASSY		A,C,D
PW1	LPA10206-14B3	JACK BOARD ASSY		B,E
PW1	LPA10206-09C3	JACK BOARD ASSY		F,G
D7001	SLR-325MC-T	LED		
D7001 or	LTL-816GE-T	LED		
D7004	SLA-580BC3T3F	LED		A,C,D,F,G
C7192	NCB31HK-681X	C CAPACITOR	680pF 50V K	
C7193	NCB31HK-681X	C CAPACITOR	680pF 50V K	
C7194	NCB31HK-681X	C CAPACITOR	680pF 50V K	
C7195	NCB31HK-681X	C CAPACITOR	680pF 50V K	
C7196	NRSA02J-0R0X	MG RESISTOR	0Ω 1/10W J	F,G
R7025	NRSA02J-472X	MG RESISTOR	4.7kΩ 1/10W J	
R7028	NRSA02J-470X	MG RESISTOR	47Ω 1/10W J	A,C,D,F,G
R7191	NRSA02J-750X	MG RESISTOR	75Ω 1/10W J	
R7192	NRSA02J-0R0X	MG RESISTOR	0Ω 1/10W J	
R7193	NRSA02J-750X	MG RESISTOR	75Ω 1/10W J	F,G
R7194	NRSA02J-750X	MG RESISTOR	75Ω 1/10W J	F,G
L7191	QRE141J-101Y	C RESISTOR	100Ω 1/4W J	
L7192	QRE141J-101Y	C RESISTOR	100Ω 1/4W J	
L7193	QRE141J-101Y	C RESISTOR	100Ω 1/4W J	
CN7191	QGF1201F2-07	CONNECTOR	FFC/FPC (1-7)	A,B,C,D,E
CN7191	QGF1201F2-11	CONNECTOR	FFC/FPC (1-11)	F,G
J7191	QNN0591-001	PIN JACK	AV IN	
J7194	QND0084-001	S JACK	S VIDEO	F,G
S7014	QSW0456-002Z	TACT SWITCH	POWER	
S7015	QSW0456-002Z	TACT SWITCH	EJECT	

LOADING MOTOR BOARD ASSEMBLY <55>

⚠ Symbol No.	Part No.	Part Name	Description	Local
PW1	LPA10158-01A2	LOADING MOTOR BOARD ASSY		

SWITCH BOARD ASSEMBLY <98>

⚠ Symbol No.	Part No.	Part Name	Description	Local
CN1	QGF1016F3-05	CONNECTOR	FFC/FPC (1-5)	
S1	QSW1007-001	DETECT SWITCH	DET SW	

DVD SERVO CONTROL BOARD ASSEMBLY <99>

⚠ Symbol No.	Part No.	Part Name	Description	Local
IC101	AN8703FH-V	IC		
IC201	BA5983FM-X	IC		
IC251	BA6664FM-X	IC	Motor driver	A,B,C,D,E
IC251	BA6679FM-X	LSI		F,G
IC301	MN103S26EDC-H	IC		
IC301 or	MN103S26EGB-H	IC		
IC402	AK4381VT-X	IC		
IC501	JCE8045	IC		A,B,C,D,E
IC501 or	NDV8601VWA-BE	IC		A,B,C,D,E
IC501	NDV8604VWA	IC		F,G

MODEL	MARK	MODEL	MARK
HR-XV3EK	A	HR-XV31EX	E
HR-XV31EK	B	HR-XVS30EK	F
HR-XV32EK	C	HR-XVS30EX	G
HR-XV3EX	D		

⚠ Symbol No.		Part No.	Part Name	Description	Local
IC501	or	NDV8611VWA	IC		F,G
IC505		K4S643232F-TC60	IC		
IC505	or	K4S643232E-TC60	IC		
IC505	or	W986432DH-7	IC		
IC505	or	HY57643220CT55	IC		
IC505	or	HY57643220CT7	IC		
IC509		SST39VF160H0CA1	IC (FLASH)	(SERVICE)	A,B,C,D,E
IC509		AT49LV1614H0E40	IC (FLASH)	(SERVICE)	F,G
IC511		LM1117MP1.8-X	IC		
IC512		74LCX373MTC-X	IC(DIGITAL)		A,B,C,D,E
IC512	or	74LCX373MTC-X	IC(DIGITAL)		F,G
IC512	or	74LVC373APW-X	IC(DIGITAL)		
IC512		SN74LVC373APW-X	IC(DIGITAL)		F,G
IC513		74LCX373MTC-X	IC(DIGITAL)		A,B,C,D,E
IC513	or	74LCX373MTC-X	IC(DIGITAL)		F,G
IC513	or	74LVC373APW-X	IC(DIGITAL)		
IC513		SN74LVC373APW-X	IC(DIGITAL)		F,G
Q101		2SB1424/R/-W	TRANSISTOR		
Q101	or	KTA1001/Y/-X	TRANSISTOR		
Q102		2SB1424/R/-W	TRANSISTOR		
Q102	or	KTA1001/Y/-X	TRANSISTOR		
Q103		DTA144EE-X	DIGI TRANSISTOR		
D101		RB521S-30-X	SB DIODE		A,B,C,D,E
D101		1SS400-X	SI DIODE		F,G
D301		RB521S-30-X	SB DIODE		
C105		NEA70JM-476X	E CAPACITOR	47uF 6.3V M	
C106		NEA70JM-476X	E CAPACITOR	47uF 6.3V M	
C109		NCB31CK-104X	C CAPACITOR	0.1uF 16V K	
C110		NCS31HJ-221X	C CAPACITOR	220pF 50V J	A,B,C,D,E
C110		NDC31HJ-221X	C CAPACITOR	220pF 50V J	F,G
C111		NCF31CZ-104X	C CAPACITOR	0.1uF 16V Z	
C112		NCF31CZ-104X	C CAPACITOR	0.1uF 16V Z	
C116		NCB31CK-104X	C CAPACITOR	0.1uF 16V K	
C117		NCB31CK-473X	C CAPACITOR	0.047uF 16V K	
C118		NCB31CK-273X	C CAPACITOR	0.027uF 16V K	
C119		NCB31HK-561X	C CAPACITOR	560pF 50V K	
C120		NCB31HK-561X	C CAPACITOR	560pF 50V K	
C121		NCB31CK-104X	C CAPACITOR	0.1uF 16V K	
C122		NCS31HJ-120X	C CAPACITOR	12pF 50V J	A,B,C,D,E
C122		NDC31HJ-120X	C CAPACITOR	12pF 50V J	F,G
C123		NCF31CZ-104X	C CAPACITOR	0.1uF 16V Z	
C124		NCS31HJ-470X	C CAPACITOR	47pF 50V J	A,B,C,D,E
C124		NDC31HJ-470X	C CAPACITOR	47pF 50V J	F,G
C125		NCB31HK-271X	C CAPACITOR	270pF 50V K	
C126		NCF31CZ-104X	C CAPACITOR	0.1uF 16V Z	
C127		NCF31CZ-104X	C CAPACITOR	0.1uF 16V Z	
C128		NCF31CZ-104X	C CAPACITOR	0.1uF 16V Z	
C129		NCB31HK-472X	C CAPACITOR	4700pF 50V K	
C135		NEA70JM-476X	E CAPACITOR	47uF 6.3V M	
C137		NEA70GM-476X	E CAPACITOR	47uF 4V M	
C138		NCF31CZ-104X	C CAPACITOR	0.1uF 16V Z	
C141		NCF31CZ-104X	C CAPACITOR	0.1uF 16V Z	
C142		NCF31CZ-104X	C CAPACITOR	0.1uF 16V Z	
C144		NCB31CK-103X	C CAPACITOR	0.01uF 16V K	
C204		NCF31CZ-104X	C CAPACITOR	0.1uF 16V Z	
C205		NCS31HJ-121X	C CAPACITOR	120pF 50V J	A,B,C,D,E
C205		NDC31HJ-121X	C CAPACITOR	120pF 50V J	F,G
C207		NCB31HK-391X	C CAPACITOR	390pF 50V K	
C208		NCB31HK-391X	C CAPACITOR	390pF 50V K	
C211		NCB31HK-223X	C CAPACITOR	0.022uF 50V K	
C212		NCB31CK-103X	C CAPACITOR	0.01uF 16V K	
C216		NCB30JK-105X	C CAPACITOR	1uF 6.3V K	
C217		NCF31CZ-104X	C CAPACITOR	0.1uF 16V Z	
C218		NCB30JK-105X	C CAPACITOR	1uF 6.3V K	
C251		NCF31CZ-104X	C CAPACITOR	0.1uF 16V Z	
C253		NCF31CZ-104X	C CAPACITOR	0.1uF 16V Z	
C255		NCB31CK-153X	C CAPACITOR	0.015uF 16V K	
C256		NCB31CK-104X	C CAPACITOR	0.1uF 16V K	
C257		NCF31CZ-104X	C CAPACITOR	0.1uF 16V Z	
C258		NCF31CZ-104X	C CAPACITOR	0.1uF 16V Z	
C259		NCF31CZ-104X	C CAPACITOR	0.1uF 16V Z	
C260		NCF31CZ-104X	C CAPACITOR	0.1uF 16V Z	
C261		NCF31CZ-104X	C CAPACITOR	0.1uF 16V Z	
C262		NCF31CZ-104X	C CAPACITOR	0.1uF 16V Z	
C263		NCF31CZ-104X	C CAPACITOR	0.1uF 16V Z	

⚠ Symbol No.	Part No.	Part Name	Description	Local
C264	NCB31CK-103X	C CAPACITOR	0.01uF 16V K	
C301	NCF31CZ-104X	C CAPACITOR	0.1uF 16V Z	
C302	NCF31CZ-104X	C CAPACITOR	0.1uF 16V Z	
C303	NCF31CZ-104X	C CAPACITOR	0.1uF 16V Z	
C304	NEA70GM-476X	E CAPACITOR	47uF 4V M	
C306	NEA70GM-476X	E CAPACITOR	47uF 4V M	
C308	NEA70GM-476X	E CAPACITOR	47uF 4V M	
C310	NCF31CZ-104X	C CAPACITOR	0.1uF 16V Z	
C311	NCB31HK-561X	C CAPACITOR	560pF 50V K	
C312	NCB31HK-561X	C CAPACITOR	560pF 50V K	
C313	NCB31HK-561X	C CAPACITOR	560pF 50V K	
C314	NCB31HK-331X	C CAPACITOR	330pF 50V K	
C315	NCB31HK-471X	C CAPACITOR	470pF 50V K	
C316	NCB31HK-271X	C CAPACITOR	270pF 50V K	
C317	NCS31HJ-121X	C CAPACITOR	120pF 50V J	A,B,C,D,E
C317	NDC31HJ-121X	C CAPACITOR	120pF 50V J	F,G
C318	NCF31CZ-104X	C CAPACITOR	0.1uF 16V Z	
C319	NCB31HK-102X	C CAPACITOR	1000pF 50V K	
C320	NCB31HK-102X	C CAPACITOR	1000pF 50V K	
C321	NCB31HK-102X	C CAPACITOR	1000pF 50V K	
C322	NCB31HK-562X	C CAPACITOR	5600pF 50V K	
C323	NCB31HK-102X	C CAPACITOR	1000pF 50V K	
C324	NCF31CZ-104X	C CAPACITOR	0.1uF 16V Z	
C325	NCS31HJ-470X	C CAPACITOR	47pF 50V J	A,B,C,D,E
C325	NDC31HJ-470X	C CAPACITOR	47pF 50V J	F,G
C326	NCB31CK-183X	C CAPACITOR	0.018uF 16V K	
C327	NCB31HK-102X	C CAPACITOR	1000pF 50V K	
C328	NCF31CZ-104X	C CAPACITOR	0.1uF 16V Z	
C329	NCB31CK-103X	C CAPACITOR	0.01uF 16V K	
C330	NCB31CK-104X	C CAPACITOR	0.1uF 16V K	
C331	NCB31CK-103X	C CAPACITOR	0.01uF 16V K	
C332	NCF31CZ-104X	C CAPACITOR	0.1uF 16V Z	
C333	NCB31CK-104X	C CAPACITOR	0.1uF 16V K	
C334	NCB31CK-104X	C CAPACITOR	0.1uF 16V K	
C337	NCF31CZ-104X	C CAPACITOR	0.1uF 16V Z	
C338	NCF31CZ-104X	C CAPACITOR	0.1uF 16V Z	
C339	NCB31CK-104X	C CAPACITOR	0.1uF 16V K	
C340	NCB31CK-104X	C CAPACITOR	0.1uF 16V K	
C341	NCF31CZ-104X	C CAPACITOR	0.1uF 16V Z	
C342	NCS31HJ-101X	C CAPACITOR	100pF 50V J	A,B,C,D,E
C342	NDC31HJ-101X	C CAPACITOR	100pF 50V J	F,G
C343	NCF31CZ-104X	C CAPACITOR	0.1uF 16V Z	
C344	NCS31HJ-101X	C CAPACITOR	100pF 50V J	A,B,C,D,E
C344	NDC31HJ-101X	C CAPACITOR	100pF 50V J	F,G
C345	NCF31CZ-104X	C CAPACITOR	0.1uF 16V Z	
C346	NCF31CZ-104X	C CAPACITOR	0.1uF 16V Z	
C347	NCF31CZ-104X	C CAPACITOR	0.1uF 16V Z	
C348	NCB31CK-104X	C CAPACITOR	0.1uF 16V K	
C349	NCF31CZ-104X	C CAPACITOR	0.1uF 16V Z	
C350	NCF31CZ-104X	C CAPACITOR	0.1uF 16V Z	
C351	NCS31HJ-101X	C CAPACITOR	100pF 50V J	A,B,C,D,E
C360	NEA70GM-476X	E CAPACITOR	47uF 4V M	
C400	NCB31HK-102X	C CAPACITOR	1000pF 50V K	
C407	NCF31CZ-104X	C CAPACITOR	0.1uF 16V Z	
C408	NEA70JM-227X	E CAPACITOR	220uF 6.3V M	
C409	NEA70JM-227X	E CAPACITOR	220uF 6.3V M	
C502	NCF31CZ-104X	C CAPACITOR	0.1uF 16V Z	
C503	NCF31CZ-104X	C CAPACITOR	0.1uF 16V Z	
C504	NCF31CZ-104X	C CAPACITOR	0.1uF 16V Z	
C505	NCF31CZ-104X	C CAPACITOR	0.1uF 16V Z	
C506	NDC31HJ-150X	C CAPACITOR	15pF 50V J	
C507	NDC31HJ-180X	C CAPACITOR	18pF 50V J	
C508	NCF31CZ-104X	C CAPACITOR	0.1uF 16V Z	
C509	NCF31CZ-104X	C CAPACITOR	0.1uF 16V Z	
C510	NCF31CZ-104X	C CAPACITOR	0.1uF 16V Z	
C512	NCF31CZ-104X	C CAPACITOR	0.1uF 16V Z	
C514	NCS31HJ-471X	C CAPACITOR	470pF 50V J	
C515	NCS31HJ-471X	C CAPACITOR	470pF 50V J	
C516	NCS31HJ-471X	C CAPACITOR	470pF 50V J	
C517	NCF31CZ-104X	C CAPACITOR	0.1uF 16V Z	
C518	NCF31CZ-104X	C CAPACITOR	0.1uF 16V Z	
C519	NCF31CZ-104X	C CAPACITOR	0.1uF 16V Z	
C520	NCS31HJ-471X	C CAPACITOR	470pF 50V J	
C521	NCF31CZ-104X	C CAPACITOR	0.1uF 16V Z	
C523	NCF31CZ-104X	C CAPACITOR	0.1uF 16V Z	
C524	NEA70GM-476X	E CAPACITOR	47uF 4V M	
C527	NEA70GM-476X	E CAPACITOR	47uF 4V M	
C528	NCS31HJ-471X	C CAPACITOR	470pF 50V J	

MODEL	MARK	MODEL	MARK
HR-XV3EK	A	HR-XV31EX	E
HR-XV31EK	B	HR-XVS30EK	F
HR-XV32EK	C	HR-XVS30EX	G
HR-XV3EX	D		

⚠ Symbol No.	Part No.	Part Name	Description	Local
C529	NCS31HJ-471X	C CAPACITOR	470pF 50V J	
C531	NCF31CZ-104X	C CAPACITOR	0.1uF 16V Z	
C532	NCF31CZ-104X	C CAPACITOR	0.1uF 16V Z	
C533	NCF31CZ-104X	C CAPACITOR	0.1uF 16V Z	
C534	NCF31CZ-104X	C CAPACITOR	0.1uF 16V Z	
C535	NCS31HJ-471X	C CAPACITOR	470pF 50V J	
C536	NCS31HJ-471X	C CAPACITOR	470pF 50V J	
C537	NCS31HJ-471X	C CAPACITOR	470pF 50V J	
C538	NCS31HJ-471X	C CAPACITOR	470pF 50V J	
C539	NCS31HJ-471X	C CAPACITOR	470pF 50V J	
C540	NCF31CZ-104X	C CAPACITOR	0.1uF 16V Z	
C541	NCF31CZ-104X	C CAPACITOR	0.1uF 16V Z	
C542	NCB31CK-104X	C CAPACITOR	0.1uF 16V K	
C543	NCF31CZ-104X	C CAPACITOR	0.1uF 16V Z	
C544	NCF31CZ-104X	C CAPACITOR	0.1uF 16V Z	
C545	NCF31CZ-104X	C CAPACITOR	0.1uF 16V Z	
C546	NCS31HJ-471X	C CAPACITOR	470pF 50V J	
C547	NCS31HJ-471X	C CAPACITOR	470pF 50V J	
C548	NCF31CZ-104X	C CAPACITOR	0.1uF 16V Z	
C549	NEA70GM-476X	E CAPACITOR	47uF 4V M	
C550	NCF31CZ-104X	C CAPACITOR	0.1uF 16V Z	
C551	NCB31CK-104X	C CAPACITOR	0.1uF 16V K	
C554	NCF31CZ-104X	C CAPACITOR	0.1uF 16V Z	
C556	NRSA63J-0R0X	MG RESISTOR	0Ω 1/16W J	
C557	NCF31CZ-104X	C CAPACITOR	0.1uF 16V Z	
C558	NCF31CZ-104X	C CAPACITOR	0.1uF 16V Z	
C559	NCS31HJ-471X	C CAPACITOR	470pF 50V J	
C560	NCS31HJ-471X	C CAPACITOR	470pF 50V J	
C561	NCS31HJ-471X	C CAPACITOR	470pF 50V J	
C562	NCF31CZ-104X	C CAPACITOR	0.1uF 16V Z	
C563	NCS31HJ-471X	C CAPACITOR	470pF 50V J	
C566	NCF31CZ-104X	C CAPACITOR	0.1uF 16V Z	
C567	NRSA63J-0R0X	MG RESISTOR	0Ω 1/16W J	
C568	NRSA63J-0R0X	MG RESISTOR	0Ω 1/16W J	
C569	NCF31CZ-104X	C CAPACITOR	0.1uF 16V Z	
C572	NCF31CZ-104X	C CAPACITOR	0.1uF 16V Z	
C573	NEA70GM-476X	E CAPACITOR	47uF 4V M	
C578	NCF31CZ-104X	C CAPACITOR	0.1uF 16V Z	
C581	NEA70GM-227X	E CAPACITOR	220uF 4V M	
C596	NCS31HJ-471X	C CAPACITOR	470pF 50V J	
R101	NRSA63J-333X	MG RESISTOR	33kΩ 1/16W J	
R102	NRSA63J-223X	MG RESISTOR	22kΩ 1/16W J	
R103	NRSA63J-223X	MG RESISTOR	22kΩ 1/16W J	
R104	NRS125J-270X	MG RESISTOR	27Ω 1/2W J	
R105	NRS125J-270X	MG RESISTOR	27Ω 1/2W J	
R106	NRSA63J-273X	MG RESISTOR	27kΩ 1/16W J	
R107	NRSA63J-273X	MG RESISTOR	27kΩ 1/16W J	
R108	NRSA63J-222X	MG RESISTOR	2.2kΩ 1/16W J	
R109	NRSA63J-182X	MG RESISTOR	1.8kΩ 1/16W J	
R110	NRSA63J-333X	MG RESISTOR	33kΩ 1/16W J	
R111	NRVA63D-243X	CMF RESISTOR	24kΩ 1/16W D	
R112	NRSA63J-822X	MG RESISTOR	8.2kΩ 1/16W J	
R113	NRSA63J-103X	MG RESISTOR	10kΩ 1/16W J	
R115	NRSA63J-0R0X	MG RESISTOR	0Ω 1/16W J	
R116	NRSA63J-101X	MG RESISTOR	100Ω 1/16W J	
R117	NRSA63J-101X	MG RESISTOR	100Ω 1/16W J	
R119	NRSA63J-2R2X	MG RESISTOR	2.2Ω 1/16W J	
R120	NRSA63J-2R2X	MG RESISTOR	2.2Ω 1/16W J	
R125	NRSA63J-105X	MG RESISTOR	1MΩ 1/16W J	
R126	NRSA63J-105X	MG RESISTOR	1MΩ 1/16W J	
R127	NRSA63J-222X	MG RESISTOR	2.2kΩ 1/16W J	
R128	NRS125J-1R0X	MG RESISTOR	1Ω 1/2W J	
R129	NRS125J-1R0X	MG RESISTOR	1Ω 1/2W J	
R130	NRSA63J-182X	MG RESISTOR	1.8kΩ 1/16W J	
R201	NRSA63J-470X	MG RESISTOR	47Ω 1/16W J	
R202	NRS125J-1R0X	MG RESISTOR	1Ω 1/2W J	
R204	NRSA63J-273X	MG RESISTOR	27kΩ 1/16W J	
R205	NRSA63J-273X	MG RESISTOR	27kΩ 1/16W J	
R206	NRSA63J-303X	MG RESISTOR	30kΩ 1/16W J	
R207	NRSA63J-473X	MG RESISTOR	47kΩ 1/16W J	
R208	NRSA63J-223X	MG RESISTOR	22kΩ 1/16W J	
R209	NRSA63J-223X	MG RESISTOR	22kΩ 1/16W J	
R210	NRSA63J-392X	MG RESISTOR	3.9kΩ 1/16W J	
R211	NRSA63J-392X	MG RESISTOR	3.9kΩ 1/16W J	
R212	NRSA63J-103X	MG RESISTOR	10kΩ 1/16W J	
R213	NRSA63J-103X	MG RESISTOR	10kΩ 1/16W J	
R214	NRSA63J-103X	MG RESISTOR	10kΩ 1/16W J	

⚠ Symbol No.	Part No.	Part Name	Description	Local
R215	NRSA63J-103X	MG RESISTOR	10kΩ 1/16W J	
R216	NRSA63J-912X	MG RESISTOR	9.1kΩ 1/16W J	
R219	NRSA63J-183X	MG RESISTOR	18kΩ 1/16W J	
R220	NRSA63J-243X	MG RESISTOR	24kΩ 1/16W J	
R221	NRSA63J-682X	MG RESISTOR	6.8kΩ 1/16W J	
R222	NRSA63J-103X	MG RESISTOR	10kΩ 1/16W J	
R223	NRSA63J-912X	MG RESISTOR	9.1kΩ 1/16W J	
R230	NRSA63J-332X	MG RESISTOR	3.3kΩ 1/16W J	
R251	NRS125J-R47X	MG RESISTOR	0.47Ω 1/2W J	
R252	NRSA63J-2R2X	MG RESISTOR	2.2Ω 1/16W J	
R254	NRSA63J-203X	MG RESISTOR	20kΩ 1/16W J	
R255	NRSA63J-103X	MG RESISTOR	10kΩ 1/16W J	
R256	NRSA63J-470X	MG RESISTOR	47Ω 1/16W J	
R259	NRSA63J-103X	MG RESISTOR	10kΩ 1/16W J	
R280	NRSA63J-332X	MG RESISTOR	3.3kΩ 1/16W J	
R301	NRSA63J-473X	MG RESISTOR	47kΩ 1/16W J	
R302	NRSA63J-473X	MG RESISTOR	47kΩ 1/16W J	
R303	NRSA63J-473X	MG RESISTOR	47kΩ 1/16W J	
R304	NRSA63J-473X	MG RESISTOR	47kΩ 1/16W J	
R305	NRSA63J-473X	MG RESISTOR	47kΩ 1/16W J	
R306	NRSA63J-473X	MG RESISTOR	47kΩ 1/16W J	
R307	NRSA63J-473X	MG RESISTOR	47kΩ 1/16W J	
R308	NRSA63J-0R0X	MG RESISTOR	0Ω 1/16W J	
R309	NRSA63J-473X	MG RESISTOR	47kΩ 1/16W J	
R313	NRSA63J-473X	MG RESISTOR	47kΩ 1/16W J	
R317	NRSA63J-473X	MG RESISTOR	47kΩ 1/16W J	
R320	NRSA63J-105X	MG RESISTOR	1MΩ 1/16W J	
R321	NRSA63J-473X	MG RESISTOR	47kΩ 1/16W J	
R323	NRSA63J-473X	MG RESISTOR	47kΩ 1/16W J	
R324	NRSA63J-473X	MG RESISTOR	47kΩ 1/16W J	
R325	NRSA63J-123X	MG RESISTOR	12kΩ 1/16W J	
R326	NRSA63J-473X	MG RESISTOR	47kΩ 1/16W J	
R327	NRSA63J-105X	MG RESISTOR	1MΩ 1/16W J	
R328	NRSA63J-153X	MG RESISTOR	15kΩ 1/16W J	
R329	NRSA63J-473X	MG RESISTOR	47kΩ 1/16W J	
R330	NRSA63J-473X	MG RESISTOR	47kΩ 1/16W J	
R331	NRSA63J-473X	MG RESISTOR	47kΩ 1/16W J	
R332	NRSA63J-102X	MG RESISTOR	1kΩ 1/16W J	
R333	NRSA63J-183X	MG RESISTOR	18kΩ 1/16W J	
R334	NRSA63J-102X	MG RESISTOR	1kΩ 1/16W J	
R336	NRSA63J-273X	MG RESISTOR	27kΩ 1/16W J	
R337	NRSA63J-273X	MG RESISTOR	27kΩ 1/16W J	
R338	NRSA63J-472X	MG RESISTOR	4.7kΩ 1/16W J	
R339	NRSA63J-472X	MG RESISTOR	4.7kΩ 1/16W J	
R340	NRSA63J-103X	MG RESISTOR	10kΩ 1/16W J	
R341	NRSA63J-562X	MG RESISTOR	5.6kΩ 1/16W J	
R342	NRSA63J-0R0X	MG RESISTOR	0Ω 1/16W J	
R343	NRSA63J-103X	MG RESISTOR	10kΩ 1/16W J	
R344	NRSA63J-103X	MG RESISTOR	10kΩ 1/16W J	
R345	NRSA63J-681X	MG RESISTOR	680Ω 1/16W J	
R403	NRSA63J-100X	MG RESISTOR	10Ω 1/16W J	
R404	NRSA63J-332X	MG RESISTOR	3.3kΩ 1/16W J	
R501	NRSA63J-470X	MG RESISTOR	47Ω 1/16W J	
R511	NRSA63J-0R0X	MG RESISTOR	0Ω 1/16W J	
R512	NRSA63J-0R0X	MG RESISTOR	0Ω 1/16W J	
R513	NRSA63J-0R0X	MG RESISTOR	0Ω 1/16W J	
R514	NRSA63J-220X	MG RESISTOR	22Ω 1/16W J	A,B,C,D,E
R515	NRSA63J-102X	MG RESISTOR	1kΩ 1/16W J	
R516	NRSA63J-0R0X	MG RESISTOR	0Ω 1/16W J	F,G
R518	NRSA63J-0R0X	MG RESISTOR	0Ω 1/16W J	F,G
R519	NRSA63J-103X	MG RESISTOR	10kΩ 1/16W J	A,B,C,D,E
R520	NRSA63J-0R0X	MG RESISTOR	0Ω 1/16W J	
R523	NRSA63J-102X	MG RESISTOR	1kΩ 1/16W J	
R524	NRSA63J-0R0X	MG RESISTOR	0Ω 1/16W J	
R525	NRSA63J-0R0X	MG RESISTOR	0Ω 1/16W J	
R526	NRSA63J-102X	MG RESISTOR	1kΩ 1/16W J	
R527	NRSA63J-102X	MG RESISTOR	1kΩ 1/16W J	
R528	NRSA63J-102X	MG RESISTOR	1kΩ 1/16W J	
R529	NRSA63J-102X	MG RESISTOR	1kΩ 1/16W J	
R550	NRSA63J-471X	MG RESISTOR	470Ω 1/16W J	
R565	NRSA63J-103X	MG RESISTOR	10kΩ 1/16W J	
R566	NRVA63D-122X	CMF RESISTOR	1.2kΩ 1/16W D	
R567	NRVA63D-102X	CMF RESISTOR	1kΩ 1/16W D	
R568	NRVA63D-102X	CMF RESISTOR	1kΩ 1/16W D	
R569	NRVA63D-102X	CMF RESISTOR	1kΩ 1/16W D	
R570	NRSA63J-100X	MG RESISTOR	10Ω 1/16W J	
R572	NRVA63D-102X	CMF RESISTOR	1kΩ 1/16W D	
R573	NRSA63J-162X	MG RESISTOR	1.6kΩ 1/16W J	

MODEL	MARK	MODEL	MARK
HR-XV3EK	A	HR-XV31EX	E
HR-XV31EK	B	HR-XVS30EK	F
HR-XV32EK	C	HR-XVS30EX	G
HR-XV3EX	D		

⚠ Symbol No.	Part No.	Part Name	Description	Local
R574	NRSA63J-162X	MG RESISTOR	1.6kΩ 1/16W J	
R575	NRSA63J-151X	MG RESISTOR	150Ω 1/16W J	
R576	NRSA63J-151X	MG RESISTOR	150Ω 1/16W J	
R578	NRSA63J-151X	MG RESISTOR	150Ω 1/16W J	
R583	NRSA63J-101X	MG RESISTOR	100Ω 1/16W J	
R584	NRSA63J-332X	MG RESISTOR	3.3kΩ 1/16W J	
R589	NRSA63J-0R0X	MG RESISTOR	0Ω 1/16W J	
R590	NRSA63J-0R0X	MG RESISTOR	0Ω 1/16W J	
R591	NRSA63J-0R0X	MG RESISTOR	0Ω 1/16W J	
R592	NRSA63J-0R0X	MG RESISTOR	0Ω 1/16W J	
R593	NRSA63J-0R0X	MG RESISTOR	0Ω 1/16W J	
R594	NRSA63J-0R0X	MG RESISTOR	0Ω 1/16W J	
L501	NQL044K-100X	COIL	10uH K	
CN101	QGF0523F1-24W	CONNECTOR	FFC/FPC (1-24)	
CN201	QGF1016F2-15W	CONNECTOR	FFC/FPC (1-15)	
CN202	QGF1016F2-05W	CONNECTOR	FFC/FPC (1-5)	
CN501	QGB2027L1-22X	CONNECTOR	B-B (1-22)	
CN502	QGB2027L1-22X	CONNECTOR	B-B (1-22)	
K101	NRSA02J-151X	MG RESISTOR	150Ω 1/10W J	A,B,C,D,E
K101	NRSA02J-470X	MG RESISTOR	47Ω 1/10W J	F,G
K201	NQR0129-002X	FERRITE BEADS		
K202	NQR0129-002X	FERRITE BEADS		
K203	NQR0339-001X	FERRITE BEADS		
K204	NQR0339-001X	FERRITE BEADS		
K501	NQR0339-001X	FERRITE BEADS		
K504	NQR0339-001X	FERRITE BEADS		
K519	NQR0339-001X	FERRITE BEADS		
K555	NQR0129-002X	FERRITE BEADS		
K556	NQR0129-002X	FERRITE BEADS		
K557	NQR0129-002X	FERRITE BEADS		
K558	NQR0129-002X	FERRITE BEADS		
K559	NQR0129-002X	FERRITE BEADS		
K560	NQR0129-002X	FERRITE BEADS		
K562	NRSA63J-0R0X	MG RESISTOR	0Ω 1/16W J	
K563	NRSA63J-0R0X	MG RESISTOR	0Ω 1/16W J	
K564	NRSA63J-0R0X	MG RESISTOR	0Ω 1/16W J	
K565	NRSA63J-0R0X	MG RESISTOR	0Ω 1/16W J	
K566	NRSA63J-0R0X	MG RESISTOR	0Ω 1/16W J	
K567	NRSA63J-0R0X	MG RESISTOR	0Ω 1/16W J	
K568	NRSA63J-0R0X	MG RESISTOR	0Ω 1/16W J	
K569	NRSA63J-0R0X	MG RESISTOR	0Ω 1/16W J	
K570	NRSA63J-0R0X	MG RESISTOR	0Ω 1/16W J	
X301	NAX0566-001X	C RESONATOR	16.934MHz	
X571	NAX0550-001X	CRYSTAL	27.000MHz	